W2710/W2710i
HT3560/HT3560i
Projector RS232 Command Control
Installation Guide

Table of Contents

Introduction 3

Wire arrangement 3

RS232 pin assignment 3

Connections and communication settings 4

RS232 serial port with a crossover cable 4

Settings 4

RS232 via LAN 7

Settings 7

RS232 via HDBaseT 8

Settings 8

Command table 10

FAQ Video 22

Introduction

The document describes how to control your BenQ projector via RS232 from a computer. Follow the procedures to complete the connection and settings first, and refer to the command table for RS232 commands.

Available functions and commands vary by model. Check the specifications and user manual of the purchased projector for product functions.

Wire arrangement

Wire Arrangement		
P1	Color	P2
1	Black	1
2	Brown	3
3	Red	2
4	Orange	4
5	Yellow	5
6	Green	6
7	Blue	7
8	Purple	8
9	Gray	9
Case	Drain wire	Case

RS232 pin assignment

Pin	Description	Pin	Description
1	NC	2	RXD
3	TXD	4	NC
5	GND	6	NC
7	RTS	8	CTS
9	NC		

Connections and communication settings

Choose one of the connections and set up properly before RS232 control.

RS232 serial port with a crossover cable

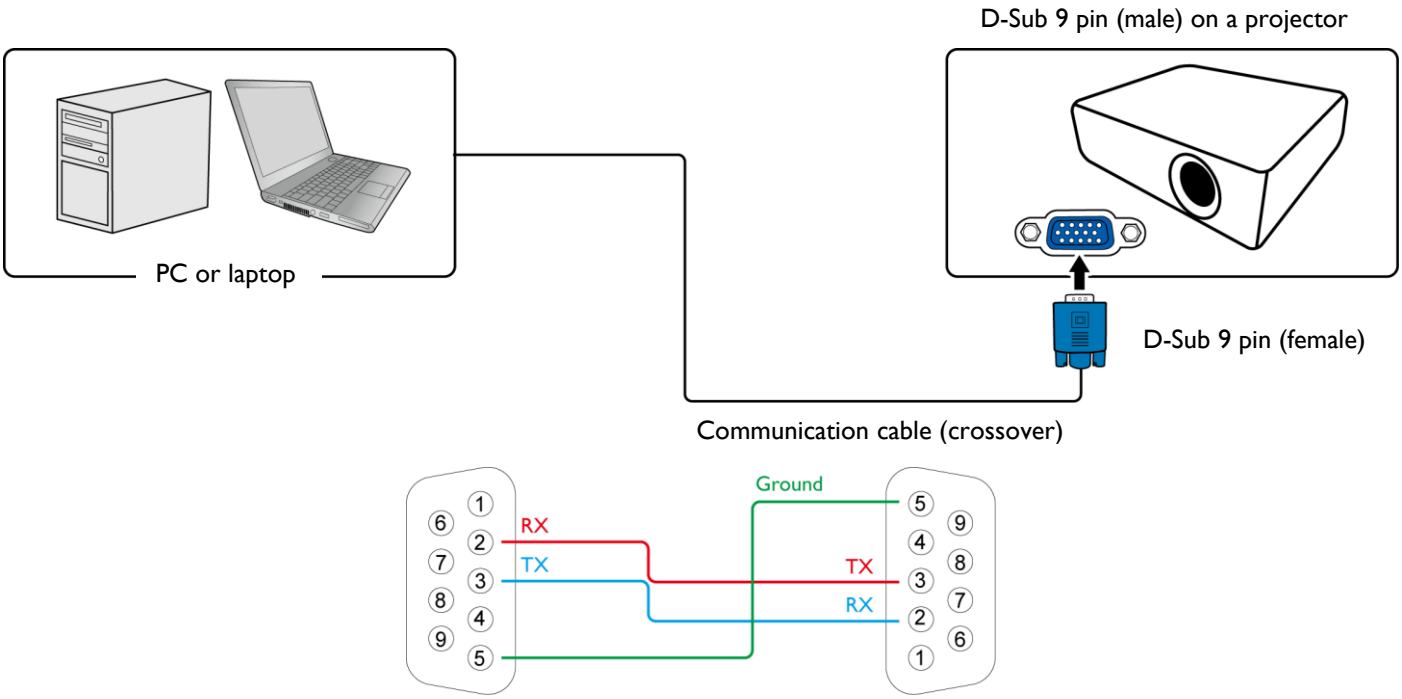

Settings

On-screen images in this document are for reference only. The screens may vary depending on your Operating System, I/O ports used for connection, and the specifications of the connected projector.

1. Determine the COM Port name used for the RS232 communications in **Device Manager**.

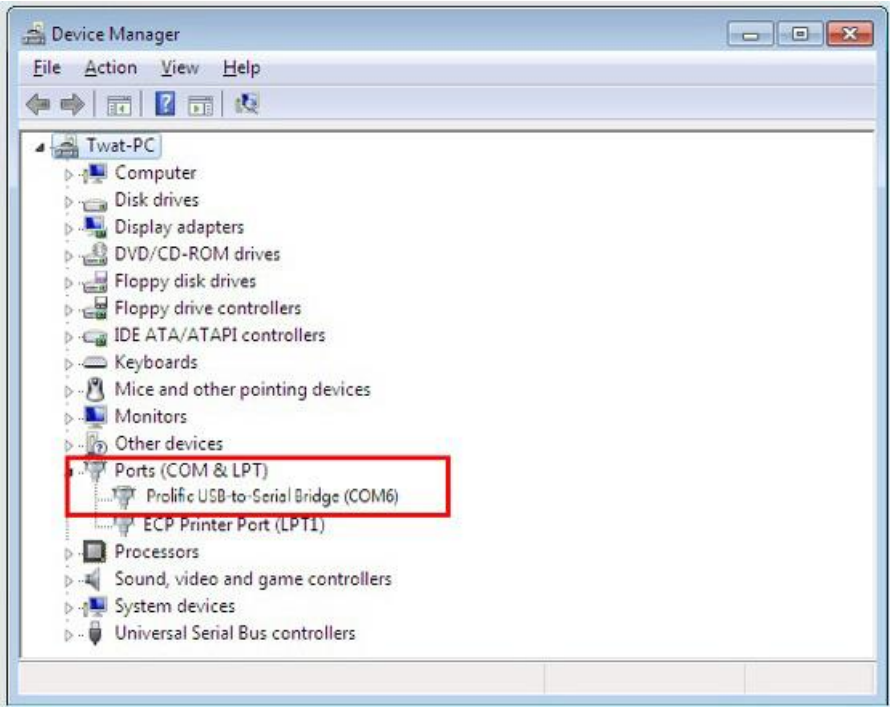

2. Choose **Serial** and the corresponding COM port as the communication port. In this given example, COM6 is selected.

3. Finish **Serial port setup**.

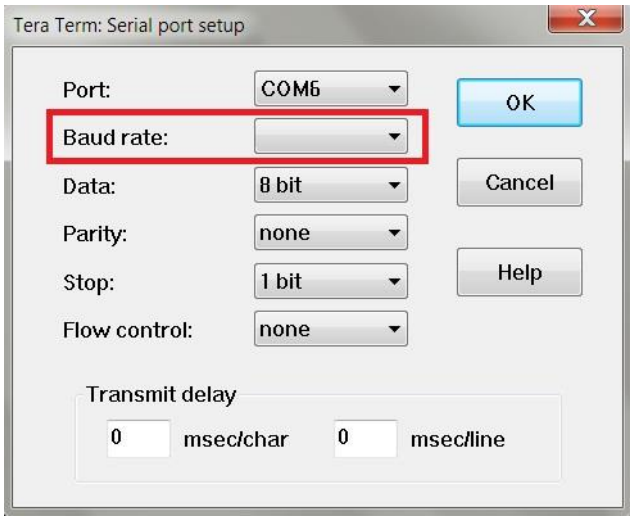

Baud rate	9600 / 14400 / 19200 / 38400 / 57600 / 115200* bps *Default Baud rate
Data length	8 bit
Parity check	None
Stop bit	1 bit
Flow control	None

RS232 via LAN

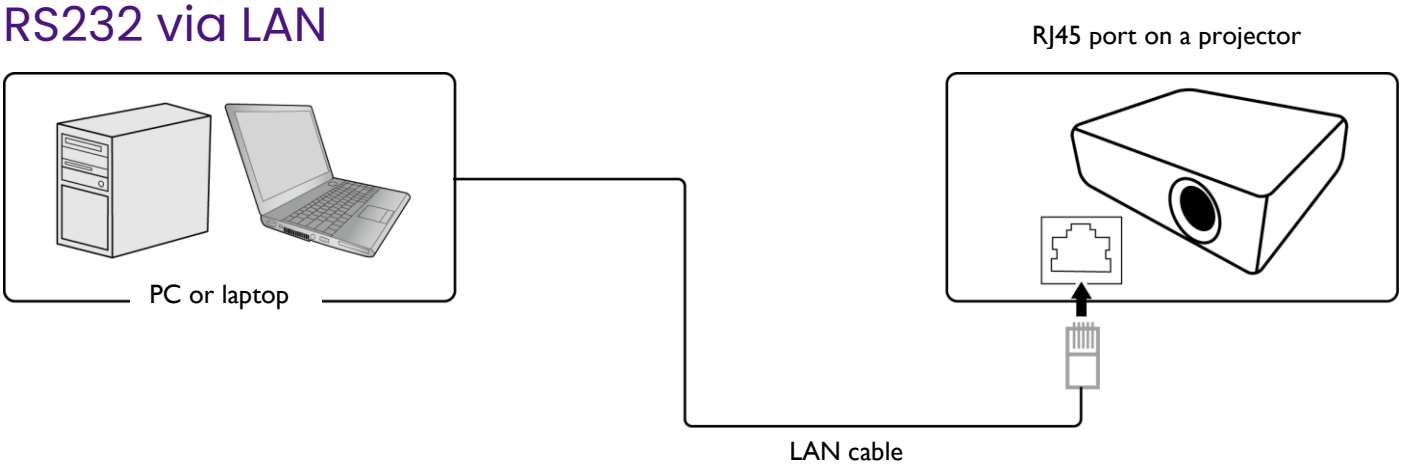

Settings

1. Find the Wired LAN IP address of the connected projector from the OSD menu and make sure the projector and the computer are within the same network.
2. Input **8000** in the **TCP port #** field.

RS232 via HDBaseT

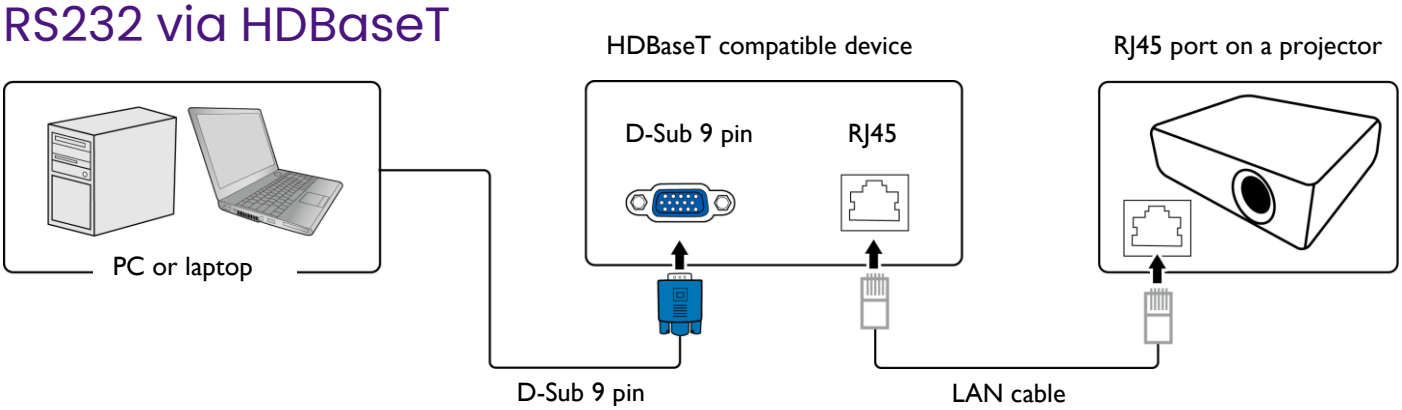

Settings

1. Determine the COM Port name used for the RS232 communications in **Device Manager**.
2. Choose **Serial** and the corresponding COM port as the communication port. In this given example, COM6 is selected.

3. Finish **Serial port setup**.

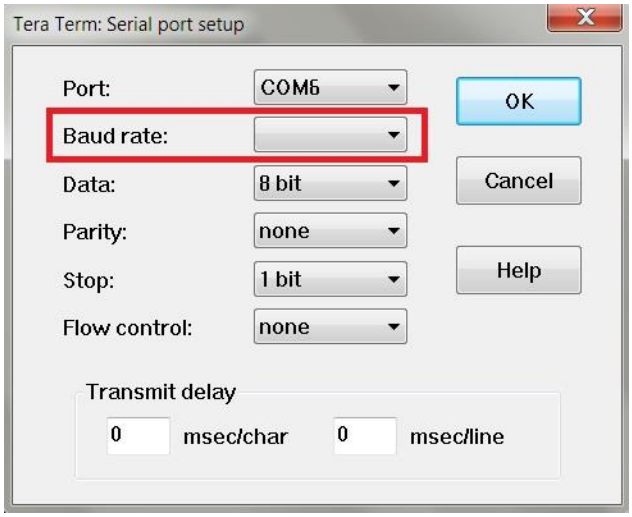

Baud rate	9600 / 14400 / 19200 / 38400 / 57600 / 115200* bps *Default Baud rate
Data length	8 bit
Parity check	None
Stop bit	1 bit
Flow control	None

Command table

- Available features differ by projector specification, input sources, settings, etc..
- Commands are working if the standby power is 0.5W or a supported baud rate of the projector is set.
- Uppercase, lowercase, and a mixture of both types of characters are accepted for a command.
- If a command format is illegal, it will echo **Illegal format**.
- If a command with correct format is not valid for the projector model, it will echo **Unsupported item**.
- If a command with correct format cannot be executed under certain condition, it will echo **Block item**.
- If RS232 control is performed via LAN, a command works whether it starts and ends with **<CR>**. All the commands and behaviors are identical with the control through a serial port.

Function	Type	Operation	ASCII	Support
Power	Write	Power On	<CR>*pow=on#<CR>	YES
	Write	Power off	<CR>*pow=off#<CR>	YES
	Read	Power Status	<CR>*pow=?#<CR>	YES
Source Selection	Write	COMPUTER/YPbPr	<CR>*sour=RGB#<CR>	NO
	Write	COMPUTER 2/YPbPr2	<CR>*sour=RGB2#<CR>	NO
	Write	COMPUTER 3/YPbPr3	<CR>*sour=RGB3#<CR>	NO
	Write	Component	<CR>*sour=ypbr#<CR>	NO
	Write	Component2	<CR>*sour=ypbr2#<CR>	NO
	Write	DVI-A	<CR>*sour=dviA#<CR>	NO
	Write	DVI-D	<CR>*sour=dvid#<CR>	NO
	Write	HDMI(MHL)	<CR>*sour=hdmi#<CR>	YES
	Write	HDMI 2(MHL2)	<CR>*sour=hdmi2#<CR>	YES
	Write	HDMI 3	<CR>*sour=hdmi3#<CR>	YES
	Write	Composite	<CR>*sour=vid#<CR>	NO
	Write	S-Video	<CR>*sour=svid#<CR>	NO
	Write	Network	<CR>*sour=network#<CR>	NO
	Write	USB Display	<CR>*sour=usbdisplay#<CR>	NO
	Write	USB Reader	<CR>*sour=usbreader#<CR>	YES
	Write	HDbaseT	<CR>*sour=hdbaset#<CR>	NO
	Write	DisplayPort	<CR>*sour=dp#<CR>	NO
	Write	3G-SDI	<CR>*sour=sdi#<CR>	NO
	Write	Smart System	<CR>*sour=smartsystem#<CR>	NO
	Read	Current source	<CR>*sour=?#<CR>	YES
Audio Control	Write	Mute On	<CR>*mute=on#<CR>	YES
	Write	Mute Off	<CR>*mute=off#<CR>	YES
	Read	Mute Status	<CR>*mute=?#<CR>	YES

	Write	Volume +	<CR>*vol=+#<CR>	YES
	Write	Volume -	<CR>*vol=-#<CR>	YES
	Write	Volume level for customer	<CR>*vol=value#<CR>	YES
	Read	Volume Status	<CR>*vol=?#<CR>	YES
	Write	Mic. Volume +	<CR>*micvol=+#<CR>	NO
	Write	Mic. Volume -	<CR>*micvol=-#<CR>	NO
	Read	Mic. Volume Status	<CR>*micvol=?#<CR>	NO
Audio source select	Write	Audio pass Through off	<CR>*audiosour=off#<CR>	NO
	Write	Audio-Computer1	<CR>*audiosour=RGB#<CR>	NO
	Write	Audio-Computer2	<CR>*audiosour=RGB2#<CR>	NO
	Write	Audio-Video/S-Video	<CR>*audiosour=vid#<CR>	NO
	Write	Audio-Component	<CR>*audiosour=ypbr#<CR>	NO
	Write	Audio-HDMI	<CR>*audiosour=hdmi#<CR>	NO
	Write	Audio-HDMI2	<CR>*audiosour=hdmi2#<CR>	NO
	Write	Audio-HDMI3	<CR>*audiosour=hdmi3#<CR>	NO
	Read	Audio pass Status	<CR>*audiosour=?#<CR>	NO
Picture Mode	Write	Dynamic	<CR>*appmod=dynamic#<CR>	NO
	Write	Presentation	<CR>*appmod=preset#<CR>	NO
	Write	sRGB	<CR>*appmod=srgb#<CR>	NO
	Write	Bright	<CR>*appmod=bright#<CR>	YES
	Write	Living Room	<CR>*appmod=livingroom#<CR>	NO
	Write	Game	<CR>*appmod=game#<CR>	NO
	Write	Cinema(Rec.709)	<CR>*appmod=cine#<CR>	YES
	Write	Standard/Vivid	<CR>*appmod=std#<CR>	NO
	Write	Football	<CR>*appmod=football#<CR>	NO
	Write	Football Bright	<CR>*appmod=footballbt#<CR>	NO
	Write	DICOM	<CR>*appmod=dicom#<CR>	NO
	Write	THX	<CR>*appmod=thx#<CR>	NO
	Write	Silence mode	<CR>*appmod=silence#<CR>	NO
	Write	DCI-P3 mode(D. Cinema)	<CR>*appmod=dci-p3#<CR>	NO
	Write	Vivid	<CR>*appmod=vivid#<CR>	NO
	Write	Infographic	<CR>*appmod=infographic#<CR>	NO
	Write	User1	<CR>*appmod=user1#<CR>	YES
	Write	User2	<CR>*appmod=user2#<CR>	NO
	Write	User3	<CR>*appmod=user3#<CR>	NO
	Write	ISF Day	<CR>*appmod=isfday#<CR>	NO

	Write	ISF Night	<CR>*appmod=isfnight#<CR>	NO
	Write	3D	<CR>*appmod=threed#<CR>	YES
	Write	Sport	<CR>*appmod=sport#<CR>	YES
	Write	HDR10	<CR>*appmod=hdr#<CR>	NO
	Write	HLG	<CR>*appmod=hlg#<CR>	NO
	Write	Spreadsheet	<CR>*appmod=spreadsheet#<CR>	NO
	Read	Picture Mode	<CR>*appmod=?#<CR>	YES
Picture Setting	Write	Contrast +	<CR>*con=+#<CR>	YES
	Write	Contrast -	<CR>*con=-#<CR>	YES
	Write	Set Contrast value	<CR>*con=value#<CR>	YES
	Read	Contrast value	<CR>*con=?#<CR>	YES
	Write	Brightness +	<CR>*bri=+#<CR>	YES
	Write	Brightness -	<CR>*bri=-#<CR>	YES
	Write	Set Brightness value	<CR>*bri=value#<CR>	YES
	Read	Brightness value	<CR>*bri=?#<CR>	YES
	Write	Color +	<CR>*color=+#<CR>	YES
	Write	Color -	<CR>*color=-#<CR>	YES
	Write	Set Color value	<CR>*color=value#<CR>	YES
	Read	Color value	<CR>*color=?#<CR>	YES
	Write	Sharpness +	<CR>*sharp=+#<CR>	YES
	Write	Sharpness -	<CR>*sharp=-#<CR>	YES
	Write	Set Sharpness value	<CR>*sharp=value#<CR>	YES
	Read	Sharpness value	<CR>*sharp=?#<CR>	NO
	Write	Flesh Tone +	<CR>*fleshtone=+#<CR>	NO
	Write	Flesh Tone -	<CR>*fleshtone=-#<CR>	NO
	Write	Set Flesh Tone value	<CR>*fleshtone=value#<CR>	NO
	Read	Flesh Tone value	<CR>*fleshtone=?#<CR>	YES
	Write	Color Temperature-Warmer	<CR>*ct=warmer#<CR>	YES
	Write	Color Temperature-Warm	<CR>*ct=warm#<CR>	YES
	Write	Color Temperature-Normal	<CR>*ct=normal#<CR>	NO
	Write	Color Temperature-Cool	<CR>*ct=cool#<CR>	YES
	Write	Color Temperature-Cooler	<CR>*ct=cooler#<CR>	NO
	Write	Color	<CR>*ct=native#<CR>	YES

		Temperature-lamp native		
	Read	Color Temperature Status	<CR>*ct=?#<CR>	YES
	Write	Aspect 4:3	<CR>*asp=4:3#<CR>	YES
	Write	Aspect 16:6	<CR>*asp=16:6#<CR>	NO
	Write	Aspect 16:9	<CR>*asp=16:9#<CR>	YES
	Write	Aspect 16:10	<CR>*asp=16:10#<CR>	NO
	Write	Aspect 2.35:1	<CR>*asp=2.35#<CR>	NO
	Write	Aspect Auto	<CR>*asp=AUTO#<CR>	YES
	Write	Aspect Real	<CR>*asp=REAL#<CR>	NO
	Write	Aspect Letterbox	<CR>*asp=LBOX#<CR>	NO
	Write	Aspect Wide	<CR>*asp=WIDE#<CR>	NO
	Write	Aspect Anamorphic	<CR>*asp=ANAM#<CR>	NO
	Write	Aspect Anamorphic 2.35	<CR>*asp=ANAM2.35#<CR>	NO
	Write	Aspect Anamorphic 16:9	<CR>*asp=ANAM16:9#<CR>	YES
	Read	Aspect Status	<CR>*asp=?#<CR>	NO
	Write	Vertical Keystone +	<CR>*vkeystone=+#<CR>	NO
	Write	Vertical Keystone -	<CR>*vkeystone=-#<CR>	NO
	Read	Vertical Keystone value	<CR>*vkeystone=?#<CR>	NO
	Write	Horizontal Keystone +	<CR>*hkeystone=+#<CR>	NO
	Write	Horizontal Keystone -	<CR>*hkeystone=-#<CR>	NO
	Read	Horizontal Keystone value	<CR>*hkeystone=?#<CR>	NO
	Write	Rotate Keystone +	<CR>*rkeystone=+#<CR>	NO
	Write	Rotate Keystone -	<CR>*rkeystone=-#<CR>	NO
	Write	Rotate Keystone value Set	<CR>*rkeystone=value#<CR>	NO
	Read	Rotate Keystone value	<CR>*rkeystone=?#<CR>	NO
	Write	Overscan Adjustment +	<CR>*overscan=+#<CR>	NO
	Write	Overscan Adjustment -	<CR>*overscan=-#<CR>	NO
	Read	Overscan Adjustment value	<CR>*overscan=?#<CR>	NO
	Write	4 Corners Top-Left-X Decrease	<CR>*cornerfittlx=-#<CR>	NO

	Write	4 Corners Top-Left-X Increase	<CR>*cornerfittlx=+#<CR>	NO
	Read	4 Corners Top-Left-X Status	<CR>*cornerfittlx=?#<CR>	NO
	Write	4 Corners Top-Left-Y Decrease	<CR>*cornerfittly=-#<CR>	NO
	Write	4 Corners Top-Left-Y Increase	<CR>*cornerfittly=+#<CR>	NO
	Read	4 Corners Top-Left-Y Status	<CR>*cornerfittly=?#<CR>	NO
	Write	4 Corners Top-Right-X Decrease	<CR>*cornerfittrx=-#<CR>	NO
	Write	4 Corners Top-Right-X Increase	<CR>*cornerfittrx=+#<CR>	NO
	Read	4 Corners Top-Right-X Status	<CR>*cornerfittrx=?#<CR>	NO
	Write	4 Corners Top-Right-Y Decrease	<CR>*cornerfittry=-#<CR>	NO
	Write	4 Corners Top-Right-Y Increase	<CR>*cornerfittry=+#<CR>	NO
	Read	4 Corners Top-Right-Y Status	<CR>*cornerfittry=?#<CR>	NO
	Write	4 Corners Bottom-Left-X Decrease	<CR>*cornerfitblx=-#<CR>	NO
	Write	4 Corners Bottom-Left-X Increase	<CR>*cornerfitblx=+#<CR>	NO
	Read	4 Corners Bottom-Left-X Status	<CR>*cornerfitblx=?#<CR>	NO
	Write	4 Corners Bottom-Left-Y Decrease	<CR>*cornerfitbly=-#<CR>	NO
	Write	4 Corners Bottom-Left-Y Increase	<CR>*cornerfitbly=+#<CR>	NO
	Read	4 Corners Bottom-Left-Y Status	<CR>*cornerfitbly=?#<CR>	NO
	Write	4 Corners Bottom-Right-X	<CR>*cornerfitbrx=-#<CR>	NO

		Decrease		
	Write	4 Corners Bottom-Right-X Increase	<CR>*cornerfitbrx=+#<CR>	NO
	Read	4 Corners Bottom-Right-X Status	<CR>*cornerfitbrx=?#<CR>	NO
	Write	4 Corners Bottom-Right-Y Decrease	<CR>*cornerfitbry=-#<CR>	NO
	Write	4 Corners Bottom-Right-Y Increase	<CR>*cornerfitbry=+#<CR>	YES
	Read	4 Corners Bottom-Right-Y Status	<CR>*cornerfitbry=?#<CR>	YES
	Write	Digital Zoom In	<CR>*zoomI#<CR>	YES
	Write	Digital Zoom out	<CR>*zoomO#<CR>	NO
	Write	Auto	<CR>*auto#<CR>	NO
	Write	Brilliant color on	<CR>*BC=on#<CR>	NO
	Write	Brilliant color off	<CR>*BC=off#<CR>	NO
	Read	Brilliant color status	<CR>*BC=?#<CR>	NO
	Write	Auto(HDR)	<CR>*hdr=auto#<CR>	YES
	Write	SDR	<CR>*hdr=sdr#<CR>	NO
	Write	HDR10	<CR>*hdr=hdr#<CR>	YES
	Write	HLG	<CR>*hdr=hlg#<CR>	YES
	Read	HDR status	<CR>*hdr=?#<CR>	YES
	Write	Reset current picture settings	<CR>*rstcurpicsetting#<CR>	YES
	Write	Reset all picture settings	<CR>*rstallpicsetting#<CR>	YES
Operation Settings	Write	Projector Position-Front Table	<CR>*pp=FT#<CR>	YES
	Write	Projector Position-Rear Table	<CR>*pp=RE#<CR>	YES
	Write	Projector Position-Rear Ceiling	<CR>*pp=RC#<CR>	YES
	Write	Projector Position-Front Ceiling	<CR>*pp=FC#<CR>	YES

	Read	Projector Position Status	<CR>*pp=?#<CR>	YES
	Write	Quick cooling on	<CR>*qcool=on<CR>	NO
	Write	Quick cooling off	<CR>*qcool=off<CR>	NO
	Read	Quick cooling status	<CR>*qcool=?<CR>	NO
	Write	Quick auto search	<CR>*QAS=on#<CR>	NO
	Write	Quick auto search	<CR>*QAS=off#<CR>	NO
	Read	Quick auto search status	<CR>*QAS=?#<CR>	NO
	Write	Menu Position - Center	<CR>*menuposition=center#<CR>	NO
	Write	Menu Position - Top-Left	<CR>*menuposition=tl#<CR>	NO
	Write	Menu Position - Top-Right	<CR>*menuposition=tr#<CR>	NO
	Write	Menu Position - Bottom-Right	<CR>*menuposition=br#<CR>	NO
	Write	Menu Position - Bottom-Left	<CR>*menuposition=bl#<CR>	NO
	Read	Menu Position Status	<CR>*menuposition=?#<CR>	NO
	Write	Direct Power On-on	<CR>*directpower=on#<CR>	YES
	Write	Direct Power On-off	<CR>*directpower=off#<CR>	YES
	Read	Direct Power On-Status	<CR>*directpower=?#<CR>	YES
	Write	Signal Power On-on	<CR>*autopower=on#<CR>	NO
	Write	Signal Power On-off	<CR>*autopower=off#<CR>	NO
	Read	Signal Power On-Status	<CR>*autopower=?#<CR>	NO
	Write	Standby Settings-Network on	<CR>*standbynet=on#<CR>	NO
	Write	Standby Settings-Network off	<CR>*standbynet=off#<CR>	NO
	Read	Standby Settings-Network Status	<CR>*standbynet=?#<CR>	NO
	Write	Standby Settings-Microphone on	<CR>*standbymic=on#<CR>	NO
	Write	Standby Settings-Microphone	<CR>*standbymic=off#<CR>	NO

		off		
	Read	Standby Settings-Microphone Status	<CR>*standbymic=?#<CR>	NO
	Write	Standby Settings-Monitor Out on	<CR>*standbymnt=on#<CR>	NO
	Write	Standby Settings-Monitor Out off	<CR>*standbymnt=off#<CR>	NO
	Read	Standby Settings-Monitor Out Status	<CR>*standbymnt=?#<CR>	NO
Baud Rate	Write	2400	<CR>*baud=2400#<CR>	NO
	Write	4800	<CR>*baud=4800#<CR>	NO
	Write	9600	<CR>*baud=9600#<CR>	NO
	Write	14400	<CR>*baud=14400#<CR>	NO
	Write	19200	<CR>*baud=19200#<CR>	NO
	Write	38400	<CR>*baud=38400#<CR>	NO
	Write	57600	<CR>*baud=57600#<CR>	NO
	Write	115200	<CR>*baud=115200#<CR>	NO
	Read	Current Baud Rate	<CR>*baud=?#<CR>	NO
Lamp Control	Read	Lamp	<CR>*ltim=?#<CR>	YES
	Read	Lamp2 Hour	<CR>*ltim2=?#<CR>	NO
	Write	Normal mode	<CR>*lampm=lnor#<CR>	YES
	Write	Eco mode	<CR>*lampm=eco#<CR>	YES
	Write	SmartEco mode	<CR>*lampm=seco#<CR>	YES
	Write	SmartEco mode 2	<CR>*lampm= seco2#<CR>	NO
	Write	SmartEco mode 3	<CR>*lampm= seco3#<CR>	NO
	Write	Dimming mode	<CR>*lampm=dimming#<CR>	NO
	Write	Custom mode	<CR>*lampm=custom#<CR>	NO
	Write	Light level for custom mode	<CR>*lampcustom=value#<CR>	NO
	Read	Light level status for custom mode	<CR>*lampcustom=?#<CR>	NO
	Write	Dual Brightest	<CR>* lampm =dualbr#<CR>	NO
	Write	Dual Reliable	<CR>* lampm =dualre#<CR>	NO

	Write	Single Alternative	<CR>* lampm =single#<CR>	NO
	Write	Single Alternative Eco	<CR>* lampm =singleeco#<CR>	NO
	Read	Lamp Mode Status	<CR>*lampm=?#<CR>	YES
Miscellaneous	Read	Model Name	<CR>*modelname=?#<CR>	YES
	Read	System F/W Version	<CR>*sysfwversion=?#<CR>	NO
	Read	Scaler F/W Version	<CR>*scalerfwversion=?#<CR>	NO
	Read	Format F/W version	<CR>*formatfwversion=?#<CR>	NO
	Read	Lan F/W Version	<CR>*lanfwversion=?#<CR>	NO
	Read	MCU F/W Version	<CR>*mcufwversion=?#<CR>	NO
	Read	Ballast F/W Version	<CR>*ballastfwversion=?#<CR>	NO
	Write	Blank On	<CR>*blank=on#<CR>	YES
	Write	Blank Off	<CR>*blank=off#<CR>	YES
	Read	Blank Status	<CR>*blank=?#<CR>	YES
	Write	Freeze On	<CR>*freeze=on#<CR>	Yes
	Write	Freeze Off	<CR>*freeze=off#<CR>	YES
	Read	Freeze Status	<CR>*freeze=?#<CR>	YES
	Write	Menu On	<CR>*menu=on#<CR>	YES
	Write	Menu Off	<CR>*menu=off#<CR>	YES
	Read	Menu Status	<CR>*menu=?#<CR>	NO
	Write	Up	<CR>*up#<CR>	YES
	Write	Down	<CR>*down#<CR>	YES
	Write	Right	<CR>*right#<CR>	YES
	Write	Left	<CR>*left#<CR>	YES
	Write	Enter	<CR>*enter#<CR>	YES
	Write	Back	<CR>*back#<CR>	NO
	Write	Source Menu On	<CR>*sourmenu=on#<CR>	NO
	Write	Source Menu Off	<CR>*sourmenu=off#<CR>	NO
	Read	Source Menu Status	<CR>*sourmenu=?#<CR>	NO
	Write	3D Sync Off	<CR>*3d=off#<CR>	NO
	Write	3D Auto	<CR>*3d=auto#<CR>	YES
	Write	3D Sync Top Bottom	<CR>*3d=tb#<CR>	YES
	Write	3D Sync Frame Sequential	<CR>*3d=fs#<CR>	NO
	Write	3D Frame packing	<CR>*3d=fp#<CR>	YES
	Write	3D Side by side	<CR>*3d=sbs#<CR>	YES
	Write	3D inverter disable	<CR>*3d=da#<CR>	NO
	Write	3D inverter	<CR>*3d=iv#<CR>	YES

	Write	2D to 3D	<CR>*3d=2d3d#<CR>	NO
	Write	3D nVIDIA	<CR>*3d=nvidia#<CR>	NO
	Read	3D Sync Status	<CR>*3d=?#<CR>	YES
	Write	Remote Receiver On	<CR>*rr=on#<CR>	NO
	Write	Remote Receiver Off	<CR>*rr=off#<CR>	NO
	Write	Remote Receiver-front+rear	<CR>*rr=fr#<CR>	NO
	Write	Remote Receiver-front	<CR>*rr=f#<CR>	NO
	Write	Remote Receiver-rear	<CR>*rr=r#<CR>	NO
	Write	Remote Receiver-top	<CR>*rr=t#<CR>	NO
	Write	Remote Receiver-top+front	<CR>*rr=tf#<CR>	NO
	Write	Remote Receiver-top+rear	<CR>*rr=tr#<CR>	NO
	Read	Remote Receiver Status	<CR>*rr=?#<CR>	NO
	Write	Instant On-on	<CR>*ins=on#<CR>	NO
	Write	Instant On-off	<CR>*ins=off#<CR>	NO
	Read	Instant On Status	<CR>*ins=?#<CR>	NO
	Write	Lamp Saver Mode-on	<CR>*lpsaver=on#<CR>	NO
	Write	Lamp Saver Mode-off	<CR>*lpsaver=off#<CR>	NO
	Read	Lamp Saver Mode Status	<CR>*lpsaver=?#<CR>	NO
	Write	Projection Log In Code on	<CR>*prjlogincode=on#<CR>	NO
	Write	Projection Log In Code off	<CR>*prjlogincode=off#<CR>	NO
	Read	Projection Log In Code Status	<CR>*prjlogincode=?#<CR>	NO
	Write	Broadcasting on	<CR>*broadcasting=on#<CR>	NO
	Write	Broadcasting off	<CR>*broadcasting=off#<CR>	NO
	Read	Broadcasting Status	<CR>*broadcasting=?<CR>	NO
	Write	AMX Device Discovery-on	<CR>*amxdd=on#<CR>	NO
	Write	AMX Device Discovery-off	<CR>*amxdd=off#<CR>	NO
	Read	AMX Device Discovery Status	<CR>*amxdd=?#<CR>	NO

	Read	Mac Address	<CR>*macaddr=?#<CR>	NO
	Read	Serial Number	<CR>*serialnumber=?#<CR>	NO
	Write	High Altitude mode on	<CR>*Highaltitude=on#<CR>	NO
	Write	High Altitude mode off	<CR>*Highaltitude=off#<CR>	YES
	Read	High Altitude mode status	<CR>*Highaltitude=?#<CR>	NO
Installation	Write	Load Lens memory 1	<CR>*lensload=m1#<CR>	NO
	Write	Load Lens memory 2	<CR>*lensload=m2#<CR>	NO
	Write	Load Lens memory 3	<CR>*lensload=m3#<CR>	NO
	Write	Load Lens memory 4	<CR>*lensload=m4#<CR>	NO
	Write	Load Lens memory 5	<CR>*lensload=m5#<CR>	NO
	Write	Load Lens memory 6	<CR>*lensload=m6#<CR>	NO
	Write	Load Lens memory 7	<CR>*lensload=m7#<CR>	NO
	Write	Load Lens memory 8	<CR>*lensload=m8#<CR>	NO
	Write	Load Lens memory 9	<CR>*lensload=m9#<CR>	NO
	Write	Load Lens memory 10	<CR>*lensload=m10#<CR>	NO
	Read	Read Lens memory status	<CR>*lensload=?#<CR>	NO
	Write	save Lens memory 1	<CR>*lenssave=m1#<CR>	NO
	Write	save Lens memory 2	<CR>*lenssave=m2#<CR>	NO
	Write	save Lens memory 3	<CR>*lenssave=m3#<CR>	NO
	Write	save Lens memory 4	<CR>*lenssave=m4#<CR>	NO
	Write	save Lens memory 5	<CR>*lenssave=m5#<CR>	NO
	Write	save Lens memory 6	<CR>*lenssave=m6#<CR>	NO
	Write	save Lens memory 7	<CR>*lenssave=m7#<CR>	NO
	Write	save Lens memory 8	<CR>*lenssave=m8#<CR>	NO
	Write	save Lens memory 9	<CR>*lenssave=m9#<CR>	NO
	Write	save Lens memory 10	<CR>*lenssave=m10#<CR>	NO
	Write	Reset Lens to center	<CR>*lensreset=center#<CR>	NO
Only for service				
Color Calibration	Write	Tint +	<CR>*tint=+#<CR>	YES
	Write	Tint -	<CR>*tint=-#<CR>	YES
	Write	Set Tint value	<CR>*tint=value#<CR>	YES
	Read	Get Tint value	<CR>*tint=?#<CR>	YES
	Write	Set BenQ gamma value	<CR>*gamma=value#<CR>	YES
	Read	Gamma value status	<CR>*gamma=?#<CR>	YES

	Write	Set HDR Brightness value	<CR>*hdrbri=value#<CR>	YES
	Read	Get HDR Brightness value	<CR>*hdibri=?#<CR>	YES
	Write	Red Gain +	<CR>*RGain=+#<CR>	YES
	Write	Red Gain -	<CR>*RGain=-#<CR>	YES
	Write	Set Red Gain value	<CR>*RGain=value#<CR>	YES
	Read	Get Red Gain value	<CR>*RGain=?#<CR>	YES
	Write	Green Gain +	<CR>*GGain=+#<CR>	YES
	Write	Green Gain -	<CR>*GGain=-#<CR>	YES
	Write	Set Green Gain value	<CR>*GGain=value#<CR>	YES
	Read	Get Green Gain value	<CR>*GGain=?#<CR>	YES
	Write	Blue Gain +	<CR>*BGain=+#<CR>	YES
	Write	Blue Gain -	<CR>*BGain=-#<CR>	YES
	Write	Set Blue Gain value	<CR>*BGain=value#<CR>	YES
	Read	Get Blue Gain value	<CR>*BGain=?#<CR>	YES
	Write	Red Offset +	<CR>*ROffset=+#<CR>	YES
	Write	Red Offset -	<CR>*ROffset=-#<CR>	YES
	Write	Set Red Offset value	<CR>*ROffset=value#<CR>	YES
	Read	Get Red Offset value	<CR>*ROffset=?#<CR>	YES
	Write	Green Offset +	<CR>*GOffset=+#<CR>	YES
	Write	Green Offset -	<CR>*GOffset=-#<CR>	YES
	Write	Set Green Offset value	<CR>*GOffset=value#<CR>	YES
	Read	Get Green Offset value	<CR>*GOffset=?#<CR>	YES
	Write	Blue Offset +	<CR>*BOffset=+#<CR>	YES
	Write	Blue Offset -	<CR>*BOffset=-#<CR>	YES
	Write	Set Blue Offset value	<CR>*BOffset=value#<CR>	YES
	Read	Get Blue Offset value	<CR>*BOffset=?#<CR>	YES
	Write	Primary Color	<CR>*primcr=value#<CR>	YES
	Read	Primary Color Status	<CR>*primcr=?#<CR>	YES
	Write	Hue +	<CR>*hue=+#<CR>	YES
	Write	Hue -	<CR>*hue=-#<CR>	YES
	Write	Set Hue value	<CR>*hue=value#<CR>	YES
	Read	Get Hue value	<CR>*hue=?#<CR>	YES
	Write	Saturation +	<CR>*saturation =+#<CR>	YES
	Write	Saturation -	<CR>*saturation =-#<CR>	YES
	Write	Set Saturation value	<CR>*saturation =value#<CR>	YES
	Read	Get Saturation value	<CR>*saturation =?#<CR>	YES

	Write	Gain +	<CR>*gain=+#<CR>	YES
	Write	Gain -	<CR>*gain=-#<CR>	YES
	Write	Set Gain value	<CR>*gain=value#<CR>	YES
	Read	Get Gain value	<CR>*gain=?#<CR>	YES
	Write	Color Gamut Auto	<CR>*cgamut=auto#<CR>	NO
	Write	Color Gamut BT.709	<CR>*cgamut=bt.709#<CR>	NO
	Write	Color Gamut BT.2020	<CR>*cgamut=bt.2020#<CR>	NO
	Write	Color Gamut DCI-P3	<CR>*cgamut=dci-p3#<CR>	NO
	Read	Color Gamut Value	<CR>*cgamut=?#<CR>	NO
	Write	Dynamic Iris ON	<CR>*diris=on#<CR>	NO
	Write	Dynamic Iris OFF	<CR>*diris=off#<CR>	NO
	Read	Dynamic Iris status	<CR>*diris=?#<CR>	YES
	Write	Color Calibration Save	<CR>*colorsave#<CR>	YES
	Write	Color Calibration pattern display	<CR>*colorpattern=value#<CR>	YES

Note: The above function will be varied from model to model.

FAQ Video

(1) How to use RS232 cable to do volume control and sound control on projector?
https://youtu.be/P4F26kEv60U

(2) How to use RS232 cable connection to power on & off projector?
https://youtu.be/faGUvcDBmJE

(3) How to set up RS232 cable connection?
https://youtu.be/CYJRqyO6K1w

(4) How to use RS232 command to request fan speed and temperature value?
https://youtu.be/KBXEd-BCDKQ

BenQ.com

© 2022 BenQ Corporation

All rights reserved. Rights of modification reserved.

Version: 1.01-C