LCD Monitor

User Manual

Video Editor Monitor | PV Series

AQCOLOR®
Colors You Can Trust

Copyright

Copyright © 2026 by BenQ Corporation. All rights reserved. No part of this publication may be reproduced, transmitted, transcribed, stored in a retrieval system or translated into any language or computer language, in any form or by any means, electronic, mechanical, magnetic, optical, chemical, manual or otherwise, without the prior written permission of BenQ Corporation.

Disclaimer

BenQ Corporation makes no representations or warranties, either expressed or implied, with respect to the contents hereof and specifically disclaims any warranties, merchantability or fitness for any particular purpose. Further, BenQ Corporation reserves the right to revise this publication and to make changes from time to time in the contents hereof without obligation of BenQ Corporation to notify any person of such revision or changes.

BenQ flicker-free technology maintains a stable backlight with a DC dimmer that eliminates the primary cause of monitor flicker, making it easier on the eyes. The performance of flicker-free may be affected by external factors such as poor cable quality, unstable power supply, signal interference, or poor grounding, and not limited to the above mentioned external factors. (Applicable for flicker-free models only.)

Product support

This document aims to provide the most updated and accurate information to customers, and thus all contents may be modified from time to time without prior notice. Please visit the website for the latest version of this document and other product information. Available files vary by model.

1. Make sure your computer is connected to the Internet.
2. Visit the local website from Support.BenQ.com. The website layout and content may vary by region/country.
   - User manual and related document
   - Drivers and applications
   - (EU only) Dismantled information: Available on the user manual download page. This document is provided based on Regulation (EU) 2019/2021 to repair or recycle your product. Always contact the local customer service for servicing within the warranty period. If you wish to repair an out-of-warranty product, you are recommended to go to a qualified service personnel and obtain repair parts from BenQ to ensure compatibility. Do not disassemble the product unless you are aware of the consequences. If you cannot find the dismantled information on your product, contact the local customer service for assistance.

Firmware upgrade

You are recommended to upgrade the product to the latest firmware version (if available) and refer to the most up-to-date user manual to make best use of the product.

To upgrade your monitor, download and install the **Display QuicKit** software from the BenQ website.

- Support.BenQ.com > model name > **Software & Driver** > **Display QuicKit** (available only when your monitor is compatible)
- Support.BenQ.com > **Display QuicKit** (availability may vary by region)

The software utility checks the compatibility of your monitor automatically once launched. Refer to the user manual of the software utility for instructions.

If your monitor is not compatible with **Display QuicKit**, and you wonder if there is an updated firmware version available, please contact BenQ customer service.

Advanced software

Apart from the built-in technologies and features available on this product, you are provided with more software applications to enhance and extend the product functionality. Download the software and its user guide as instructed from the BenQ website.

• **Display Pilot 2**

Display Pilot 2 is a software utility that allows for quick accurate tuning of the display with the ability to easily save and use monitor configurations that are best suited for you. All adjustments are controlled via software to eliminate the need to use the monitor on-screen displays (OSD).

• **AQCOLOR Pilot**

The **AQCOLOR Pilot** software simplifies and speeds up calibration process. With visualized menus and friendly UI design, you can achieve software calibration that meets international standards for long-term color accuracy, even without prior experience. Visit BenQ **AQCOLOR Pilot** website for more information on supported models and calibrators.

EPREL Registration Number:
PV2750U: 2792963
PV3250U: 2699908

Q&A index

Start with the topics that you are interested in.

Setup

How to set up the monitor and turn it on?

Safety precautions 7
How to assemble your monitor hardware 22
Connect the PC video cable. 24
Adjusting the monitor height 32

How to adjust the monitor viewing angle

Viewing angle adjustment 33

How to install the shading hood?

Installing the shading hood 33

How to wall mount the monitor?

Mounting the monitor 34

Input source and color setting

How to switch the input sources?

Connect the PC video cable. 24
Signal Input 51

Is there any recommended color setting for certain scenario?

Choosing an appropriate color mode 43

What menu options are available to each color mode?

Available menu options to each Color Mode 58

How to watch HDR content?

Working with HDR technology 44

Useful tools to enhance efficiency

How can I efficiently manage the display settings?

Video inspection and preview tools 48
Display Pilot 2 4

Can I control two computers with one set of keyboard and mouse?

Sharing a set of keyboard, mouse, and other USB peripherals with KVM 46

How to split my screen to show two sources at the same time?

Displaying two sources at the same time (PIP/PBP) 46

Menus and accessories

Can I set hot keys to frequently used functions or menus?

Personalizing your front access control 36
Customizing your Hotkey Puck G4 40

How to use the OSD menu?

5-way controller and basic menu operations 35
Navigating the main menu 50

How to use the provided controller (Hotkey Puck Gen4)?

Controlling the monitor remotely by Hotkey Puck G4 36
Working with the Dial Quick Menu 40
Controlling monitors with Hotkey Puck G4 45

Maintenance and product support

How to clean the monitor?

Care and cleaning 10
Cleaning the LCD screen 12

How to keep the monitor not in use for a long time?

How to detach the stand 30
Care and cleaning 10

I need more support.

Product support 3
Servicing 10

Safety precautions

Power safety

Please follow these safety instructions for best performance, and long life for your monitor.

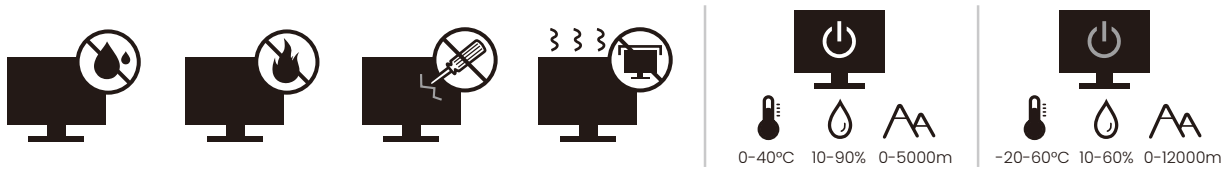

- The AC plug isolates this equipment from the AC supply.
- The power supply cord serves as a power disconnect device for pluggable equipment. The socket outlet should be installed near the equipment and be easily accessible.
- This product should be operated from the type of power indicated on the marked label. If you are not sure of the type of power available, consult your dealer or local power company.
- The Class I pluggable equipment Type A must be connected to protective earth.
- An approved power cord greater or equal to H03VV-F or H05VV-F, 2G or 3G, 0.75mm^2 must be used.
- Use only the power cord provided by BenQ. Never use a power cord that appears to be damaged or frayed.
- To avoid possible damage to the monitor, do not use it in a region where power supply is unstable.
- Ensure that the power cord is connected to a grounded power outlet before turning on the monitor.
- To avoid possible danger, observe the total electric load when using the monitor with a (multi-outlet) extension cord.
- Always turn off the monitor before unplugging the power cord.

For Germany only:

- (If the weight of the product is less than or equal to 3 kg) An approved power cord greater or equal to H03VV-F, 3G, 0.75mm^2 must be used.
- (If the weight of the product is more than 3 kg) An approved power cord greater or equal to H05VV-F or H05RR-F, 3G, 0.75mm^2 must be used.
- (If a remote control is provided) RISK OF EXPLOSION IF BATTERY IS REPLACED BY AN INCORRECT TYPE. DISPOSE OF USED BATTERIES ACCORDING TO THE INSTRUCTIONS.

For models with adapter:

- Use only the power adapter supplied with your LCD Monitor. Use of another type of power adapter will result in malfunction and/or danger.
- Allow adequate ventilation around the adapter when using it to operate the device or charge the battery. Do not cover the power adapter with paper or other objects that will reduce cooling. Do not use the power adapter while it is inside a carrying case.
- Connect the power adapter to a proper power source.
- Do not attempt to service the power adapter. There are no service parts inside. Replace the unit if it is damaged or exposed to excess moisture.

Installation

- Do not use your monitor under any of the following environmental conditions:
  - Extremely high or low temperature, or in direct sunlight
  - Dusty places
  - Highly humid, exposed to rain, or close to water
  - Exposed to vibrations or impacts in places such as cars, buses, trains, and other rail vehicles
  - Near heating appliances such as radiators, heaters, fuel stoves, and other heat-generating items (including audio amplifiers)
  - An enclosed place (such as a closet or bookcase) without appropriate ventilation
  - An uneven or sloping surface
  - Exposed to chemical substances or smoke
- Carry the monitor carefully.
- Do not place heavy loads on the monitor to avoid possible personal injury or damage to the monitor.
- Ensure that children do not hang or climb onto the monitor.
- Keep all packing bags out of reach of children.

Operation

- To protect your eyesight, please refer to the user manual to set the optimal screen resolution and the viewing distance.
- To reduce eye fatigue, take a break on a regular basis while using the monitor.
- Avoid taking either one of the following actions for a long time. Otherwise, burn marks may occur.
  - Play images that cannot occupy the screen entirely.
  - Place a still image on the screen.
- To avoid possible damage to the monitor, do not touch the monitor panel by finger tip, pen, or any other sharp objects.
- Excessively frequent plug and unplug of video connectors may cause damage to the monitor.
- This monitor is designed mainly for personal use. If you want to use the monitor in a public place or a harsh environment, contact your nearest BenQ service center for assistance.
- To avoid possible electric shock, do not disassemble or repair the monitor.
- If a bad smell or an abnormal sound appears to come from the monitor, contact your nearest BenQ service center for assistance immediately.

Caution

- The monitor should be 50 ~ 70 cm (20 ~ 28 inches) away from your eyes.
- Looking at the screen for an extended period of time causes eye fatigue and may deteriorate your eyesight. Rest your eyes for 5 ~ 10 minutes for every 1 hour of product use.
- Reduce your eye strain by focusing on objects far away.
- Frequent blinking and eye exercise help keep your eyes from drying out.

Safety notice for remote control (applicable if a remote control is provided)

- Do not put the remote control in the direct heat, humidity, and avoid fire.
- Do not drop the remote control.
- Do not expose the remote control to water or moisture. Failure to do so could result in malfunction.
- Confirm there is no object between the remote control and the remote sensor of the product.
- When the remote control will not be used for an extended period, remove the batteries.

Battery safety notice (applicable if a remote control is provided)

The use of the wrong type of batteries may cause chemical leaks or explosion. Please note the following:

- Always ensure that the batteries are inserted with the positive and negative terminals in the correct direction as shown in the battery compartment.
- Different types of batteries have different characteristics. Do not mix different types.
- Do not mix old and new batteries. Mixing old and new batteries will shorten battery life or cause chemical leaks from the old batteries.
- When batteries fail to function, replace them immediately.
- Chemicals which leak from batteries may cause skin irritation. If any chemical matter seeps out of the batteries, wipe it up immediately using a dry cloth, and replace the batteries as soon as possible.
- Due to varying storage conditions, the battery life for the batteries included with your product may be shortened. Replace them within 3 months or as soon as you can after initial use.
- There may be local restrictions on the disposal or recycling of batteries. Consult your local regulations or waste disposal provider.

If the supplied remote control contains a coin / button cell battery, pay attention to the following notice as well.

- Do not ingest battery. Chemical Burn Hazard.
- The remote control supplied with this product contains a coin / button cell battery. If the coin / button cell battery is swallowed, it can cause severe internal burns in just 2 hours and can lead to death.
- Keep new and used batteries away from children. If the battery compartment does not close securely, stop using the product and keep it away from children.
- If you think batteries might have been swallowed or placed inside any part of the body, seek immediate medical attention.

Care and cleaning

- Do not place the monitor face down on the floor or a desk surface directly. Otherwise, scratches on the panel surface may occur.
- The equipment is to be secured to the building structure before operation.
- (For models that support wall or ceiling mounting)
  - Install your monitor and monitor mounting kit on a wall with flat surface.
  - Ensure that the wall material and the standard wall mount bracket (purchased separately) are stable enough to support the weight of the monitor.
  - Turn off the monitor and the power before disconnecting the cables from the LCD monitor.
- Always unplug the product from the power outlet before cleaning. To clean the monitor, see Cleaning the LCD screen on page 12 for more information.
- Slots and openings on the back or top of the cabinet are for ventilation. They must not be blocked or covered. Your monitor should never be placed near or over a radiator or heat sources, or in a built-in installation unless proper ventilation is provided.
- Do not place heavy loads on the monitor to avoid possible personal injury or damage to the monitor.
- Consider keeping the box and packaging in storage for use in the future when you may need to transport the monitor.
- Refer to the product label for information on model name, power rating, manufacturing date, barcode, serial number, and identification markings. The locations of labels vary by model. See the illustration below for where the labels can be.

Possible label location:

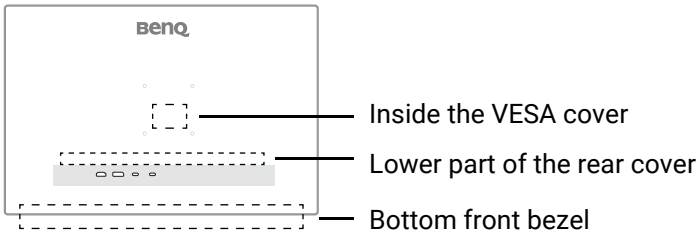

Servicing

- Do not attempt to service this product yourself, as opening or removing covers may expose you to dangerous voltages or other risks. If any of the above mentioned misuse or other accident such as dropping or mishandling occurs, contact qualified service personnel for servicing.
- Contact your place of purchase or visit the local website from Support.BenQ.com for more support.

Support.BenQ.com

General warranty information

Note that the monitor warranty may be void if any of the following conditions occurs:

- Documents required for warranty services have been altered by unauthorized use or is illegible.
- The model number or production number on the product has been altered, deleted, removed or made illegible.

- Repairs, modifications, or alterations have been made by unauthorized service organizations or persons.
- Damage caused by improper storage of the monitor (including but not limited to force majeure, direct exposure to sunlight, water, or fire).
- Reception problems occurred due to external signals (such as antenna, Cable TV) outside the monitor.
- Defects caused by abuse or misuse of the monitor.
- Before using the monitor, it is the sole responsibility of the user to check whether the monitor is compatible with local technical standards if the user brings the monitor out of its intended sales area. Failure to do so may cause product breakdown and the user will have to pay the repairing costs.
- It is the sole responsibility of the user if problems (such as data loss and system failure) occurred due to non-factory provided software, parts, and/or non-original accessories.
- Please use the original accessories (e.g. power cable) only with the device to avoid possible dangers such as electric shock and fire.

Typographics

Icon / Symbol	Item	Meaning
	Warning	Information mainly to prevent the damage to components, data, or personal injury caused by misuse and improper operation or behavior.
	Tip	Useful information for completing a task.
	Note	Supplementary information.

In this document, the steps needed to reach a menu may be shown in condensed form, for example: **Menu** > **System** > **Information**.

Cleaning the LCD screen

Please follow these safety instructions for best performance, and long life for your monitor.

As your monitor panel comes with a special coating, use and clean the monitor carefully.

- Stains on the monitor screen could be obvious. Be cautious when you use or clean the monitor and avoid getting oil or dust on the screen.
- Fingerprints and dust under normal use could be wiped away by a microfiber cleaning cloth.
- Clean the screen surface gently and carefully. Hard scrubbing could damage the screen coating.

Be sure to follow the instructions to clean the screen surface appropriately.

Using a microfiber cleaning cloth* (recommended)

You are recommended to use a microfiber cleaning cloth to clean your monitor screen. It is an eco-friendly design as it is reusable, washable, and liquid-free.

1. Unplug the monitor from the power outlet before cleaning.
2. Make sure there is no sharp debris on the cleaning cloth to avoid scratching the screen.
3. Hold the edge of the monitor and avoid excessive force on the screen.
4. Make sure the cleaning cloth is clean and dry. Start with a small, clean part of the cloth and wipe the stained area of the screen gently in circles. If it is still not clean, continue with another clean part of the cloth to avoid spreading the grease around. If both sides of the cloth are used and get dirty, wash and dry the cloth properly.

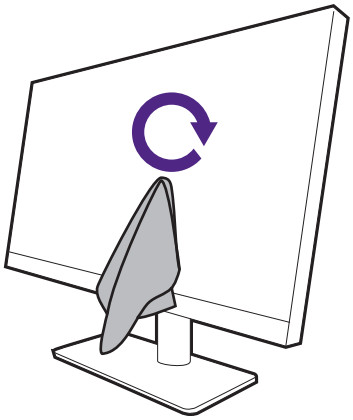

- *: The availability or the cleaning cloth varies by model. See Getting started on page 16 for your package contents
- To prevent the seams around the cleaning cloth from marring the screen surface, avoid wiping the screen with the edge of the cleaning cloth.

5. If necessary, apply a small drop of alcohol-free screen cleaner on a small, clean part of the cleaning cloth, and wipe the stained area gently in circles. See Using a screen cleaner on page 13 for more information.

6. Use a clean part of the cloth to wipe dry the screen completely. If it is still not clean, continue with another clean part of the cloth to avoid spreading the grease around. Repeat this step until the screen is clean.

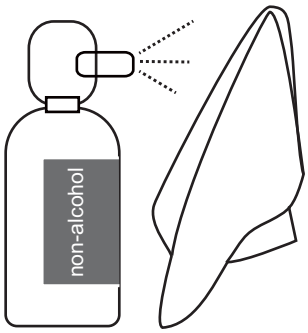

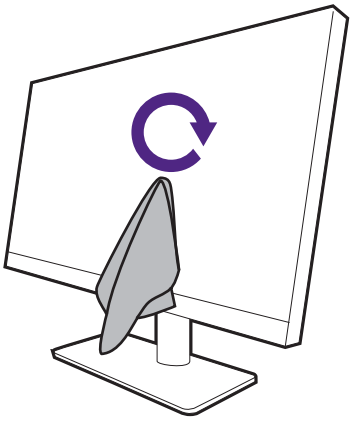

7. The cleaning cloth may get dirty after using several times and may not be able to clean the screen properly. Wash it with detergent and remove debris from it by hand if necessary. Keep it in a cool place until it is dry. Make sure it is completely dry before next cleaning.

Using a screen cleaner

- Use screen cleaning wipes which are pre-moistened and alcohol-free. You can wipe away oil and fingerprints easily.
- Use an alcohol-free screen cleaner kit. Spray on the microfiber cloth that came with the screen cleaner kit, and wipe stains off the screen. Never spray anything directly onto the screen.
- Make sure no liquid goes into the gap between the screen and the bezel. Liquids inside the monitor could cause short circuits.

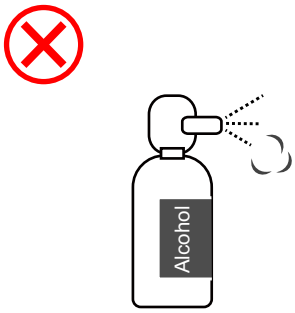

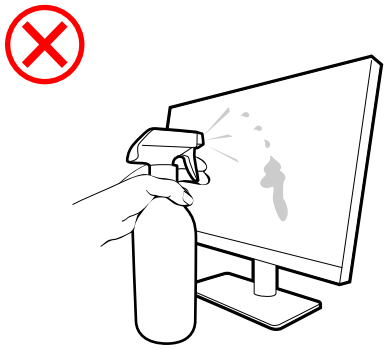

Table of Contents

Copyright 2

Product support 3

- Firmware upgrade 3
- Advanced software 4

Q&A index 5

Safety precautions 7

- Power safety 7
- Installation 8
- Operation 8
- Safety notice for remote control (applicable if a remote control is provided) 9
- Battery safety notice (applicable if a remote control is provided) 9
- Care and cleaning 10
- Servicing 10
- General warranty information 10

Cleaning the LCD screen 12

- Using a microfiber cleaning cloth* (recommended) 12
- Using a screen cleaner 13

Getting started 16

Getting to know your monitor 17

- Front view 17
- Back view 18
- Connections 19

Assembling your monitor 22

- How to assemble your monitor hardware 22
- Installing the shading hood 27
- Installing the batteries to Hotkey Puck G4 28
- Mounting the monitor 29
- How to detach the stand 30

Adjusting monitor angles 32

- Adjusting the monitor height 32
- Rotating the monitor 32
- Viewing angle adjustment 33

How to adjust your monitor 34

- Controlling the monitor by front access control 34
- Personalizing your front access control 36
- Controlling the monitor remotely by Hotkey Puck G4 36
- Adjustable OSD settings 41
- Scanning for inputs automatically 41

Viewing the current display settings 41
Adjusting **Display Mode** 43
Choosing an appropriate color mode 43
Working with HDR technology 44
Working with two color settings on the same image (**GamutDuo**) 44

Working with multiple monitors/video sources 45
Controlling monitors with Hotkey Puck G4 45
Sharing a set of keyboard, mouse, and other USB peripherals with KVM 46
Displaying two sources at the same time (PIP/PBP) 46
Connecting multiple monitors via daisy chain 47

Video inspection and preview tools 48
Checking shadow details 48
Zooming in the image 48
Previewing the content output 48
Monitoring audio clarity 49

Navigating the main menu 50
Display menu 51
Color menu 54
KVM Switch menu 59
Headphone menu 60
GamutDuo menu 62
Custom Key menu 64
System menu 67
Information menu 71

Troubleshooting 72
Frequently asked questions (FAQ) 72
Need more help? 74

2026/8/20
PV50U-EM-V1

Getting started

When unpacking please check you have the following items. If any are missing or damaged, please contact the place of purchase for a replacement.

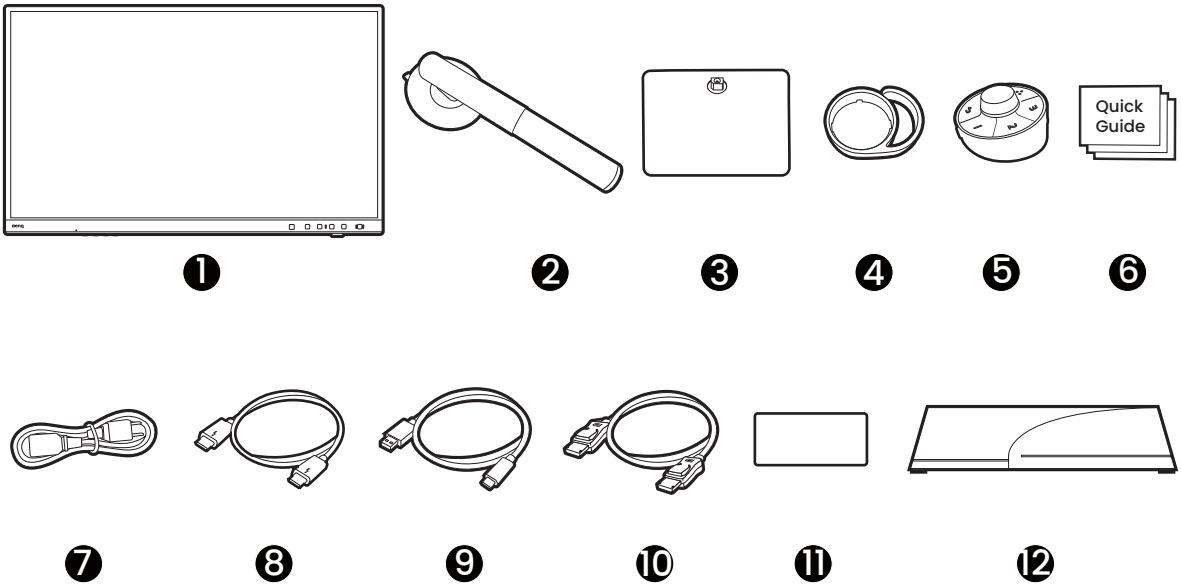

1. LCD monitor
2. Monitor stand
3. Monitor base
4. Cable holder
5. Hotkey Puck G4 (Batteries should be purchased separately.)
6. User documents:
   - Quick Start Guide
   - Greeting Card
   - Safety Instructions
   - Regulatory Statements
7. Power cord (Supplied item may differ by model or region.)
8. Video cable: Thunderbolt™
9. USB cable: USB-C to USB-A
10. Video cable: DP
11. Calibration report
12. Shading hood

- Available accessories and the pictures shown here may differ from the actual contents and the product supplied for your region. And the package contents may be subject to change without prior notice. For cables that are not supplied with your product, you can purchase them separately.
- Consider keeping the box and packaging in storage for use in the future when you may need to transport the monitor. The fitted foam packing is ideal for protecting the monitor during transport.
- Accessories and cables may be included or sold separately depending on the product supplied for your region.

Always keep the product and accessories out of reach of small children.

Getting to know your monitor

Front view

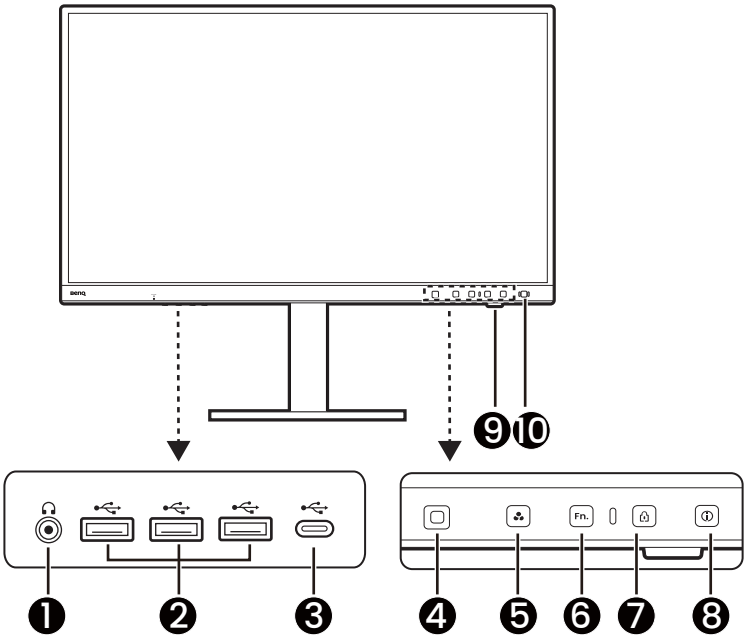

1. Headphone jack
2. USB-A ports (downstream; connecting to USB devices and power delivery up to 7.5W)
3. USB-C™ data port 3.2 Gen2 (downstream; connecting to USB devices and power delivery up to 7.5W)
4. 5-way controller
5. Mode key / LED indicator
6. Function key / LED indicator
7. OSD lock key / LED indicator
8. Information key / LED indicator
9. IR sensor (for Hotkey Puck G4)
10. Power button / Power LED indicator

Back view

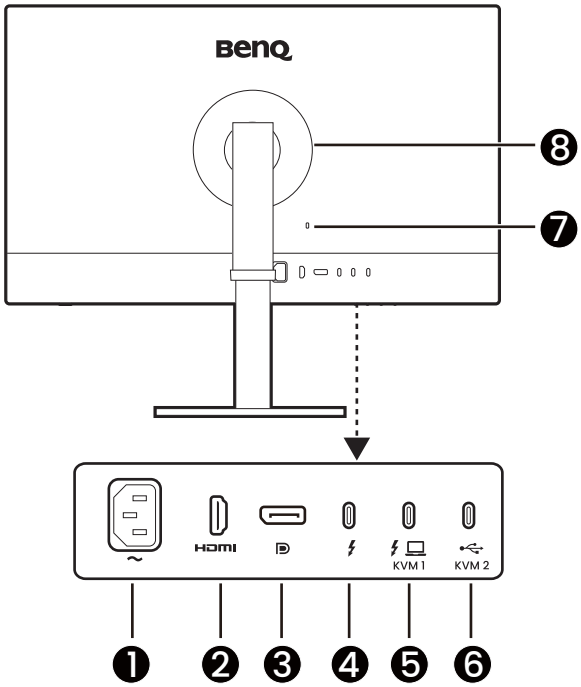

1. AC power input jack
2. HDMI sockets
3. DisplayPort socket
4. Thunderbolt™ 4 socket (*, for video out in daisy chain only)
5. Thunderbolt™ 4 socket (**, for video, data transfer and power delivery up to 96W)
6. USB-C™ port 3.2 Gen 2 (upstream; connecting to the PC)
7. Kensington lock slot
8. VESA cover

- *: 1) Thunderbolt™ 4 with up to 40 Gbs bandwidth; 2) supports up to two 4K monitors by daisy chain; 3) power delivery up to 15W. See Connectivity of Thunderbolt™ 4 on your monitor on page 20 for more information.
- **: 1) Thunderbolt™ 4 with up to 40 Gbs bandwidth; 2) supports up to two 4K monitors by daisy chain; 3) power delivery up to 96W. See Connectivity of Thunderbolt™ 4 on your monitor on page 20 for more information.
- The USB data transmission speed varies according to your selection in USB-C Configuration on page 69.
- Depending on the product specifications, the supported resolution and timing may vary.
- Above diagram may vary depending on the model.
- Picture may differ from product supplied for your region.
- (Applicable for products with white case) The case of the product may turn yellow in about 3 years due to the photo-oxidation reactions induced by light. This is a normal phenomenon and should not be considered as manufacturing defect.

Connections

The following connection illustrations are for your reference only. For cables that are not supplied with your product, you can purchase them separately.

For detailed connection methods, see page 24 - 25.

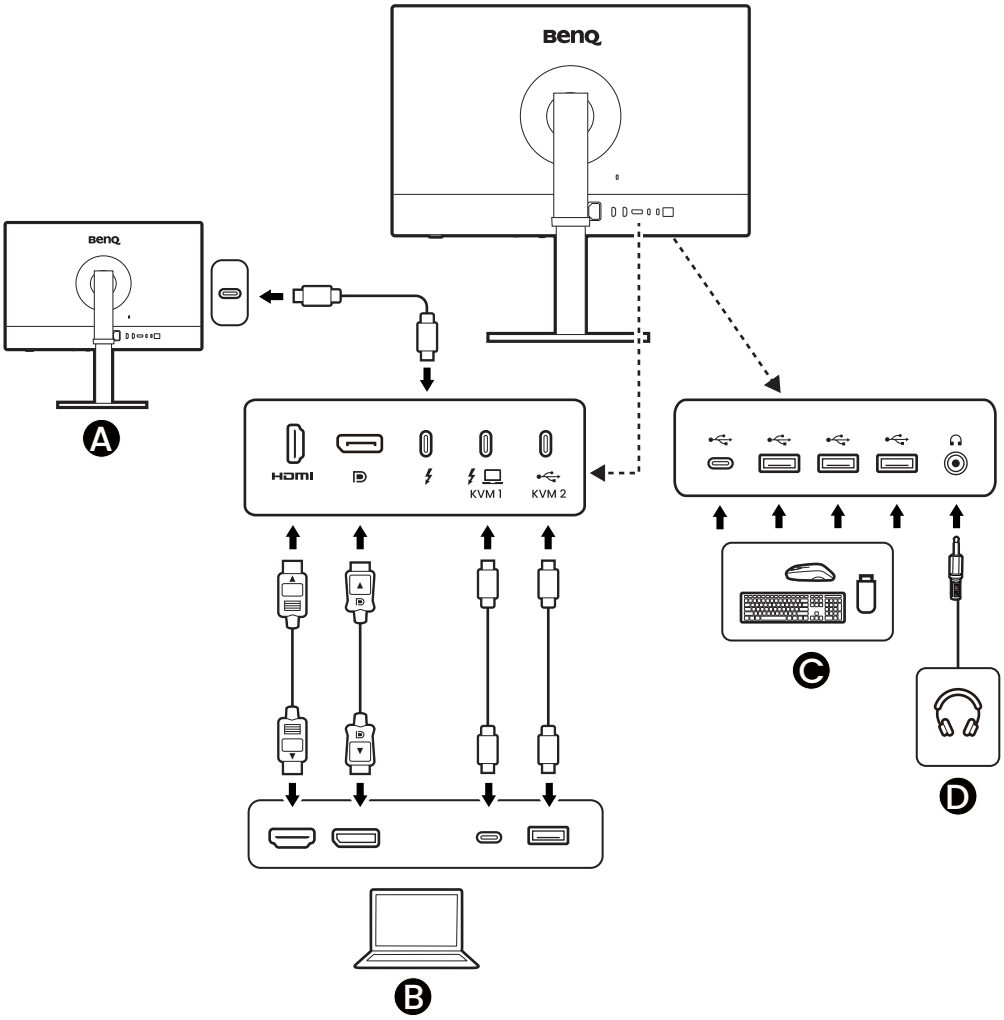

A. Monitor (for daisy chain)
B. PC/laptop
C. USB peripherals
D. Headphone/speakers

Connectivity of Thunderbolt™ 4 on your monitor

The Thunderbolt™ 4 ports on your product are compatible with Thunderbolt™ 4 and USB-C™ connectors. The connectivity, however, may vary depending on the cable used and the capability of the connected computer.

Computer's port for connection	Cable for connection	Monitor's port for connection	Connectivity
Thunderbolt™ port	• Passive Thunderbolt™ 4 cable (as provided) • USB-C™ cable (purchased separately)	Thunderbolt™ 4 port	OK
USB-C™ port	Passive Thunderbolt™ 4 cable (as provided)	Thunderbolt™ 4 port	OK
USB-C™ port	Active Thunderbolt™ 4 cable (purchased separately)	Thunderbolt™ 4 port	OK (*)
USB-C™ port	USB-C™ cable (purchased separately)	Thunderbolt™ 4 port	OK

Power delivery of Thunderbolt™ 4 port on your monitor

With the power delivery function, your monitor helps supply power to the connected Thunderbolt™ 4 devices. Available power varies by port. Make sure the devices are connected to the appropriate ports to be activated properly with sufficient power.

Thunderbolt 1 ( )	Thunderbolt 2 ( )
5V / 3A	5V / 3A
9V / 3A	N/A
15V / 3A	N/A
20V / 4.8A	N/A

Power delivery of USB-C™ ports on your monitor

With the power delivery function, your monitor helps supply power to the connected USB-C™ devices. Available power varies by port. Make sure the devices are connected to the appropriate ports to be activated properly with sufficient power.

USB-C™ 7.5 W (at the front bottom right corner of the monitor)
5V / 1.5A
N/A
N/A
N/A
N/A

- A connected device needs to be equipped with a USB-C™ connector that supports charging function via USB power delivery.
- The connected device can be charged via USB-C™ port even when the monitor is in power saving mode.(*)
- The USB power delivery is up to 7.5W. If the connected device requires more than the delivered power for operation or for boot up (when the battery is drained), use the original power adapter that came with the device.
- The information is based on the standard testing criteria and is provided for reference. The compatibility is not guaranteed as the user environments vary. If a separately purchased USB-C™ cable is used, make sure the cable is certified by USB-IF and is full-featured, with power delivery and video / audio / data transfer functions.

*: Charging via USB-C™ in monitor power saving mode is available when the **Standby Charging** function is enabled. Go to **System** > **Standby Charging** and select **ON**.

Assembling your monitor

How to assemble your monitor hardware

- If the computer is turned on you must turn it off before continuing.
  Do not plug-in or turn-on the power to the monitor until instructed to do so.
- The following illustrations are for your reference only. The location and available input and output jacks may vary depending on the purchased model.

Avoid finger pressure on the screen surface.

1. Attach the monitor base.

Please be careful to prevent damage to the monitor. Placing the screen surface on an object like a stapler or a mouse will crack the glass or damage the LCD substrate voiding your warranty. Sliding or scraping the monitor around on your desk will scratch or damage the monitor surround and controls.

Open the box, unfold the front side of the box as illustrated to leave some room for stand and base attachment.

Remove the upper layer of the packaging, and take out the monitor stand and base.

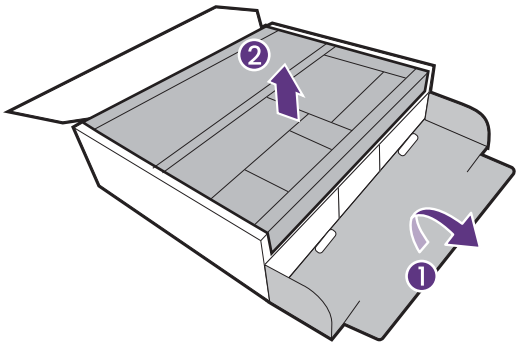

Align the cable holder with the monitor stand as illustrated. Push them together until they click and lock into place.

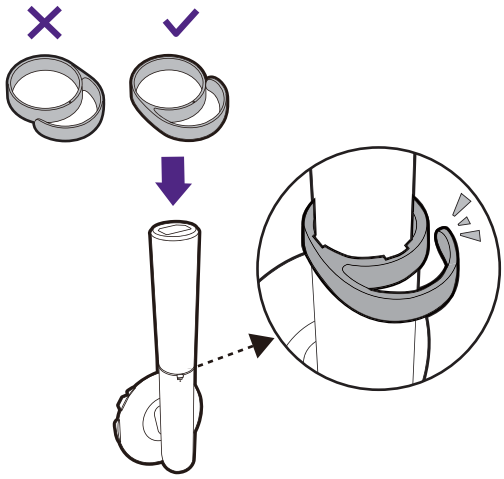

Attach the monitor stand to the monitor base as illustrated.

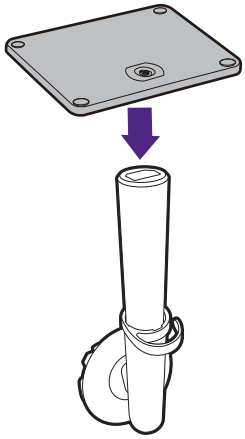

Tighten the thumbscrew on the bottom of the monitor base as illustrated.

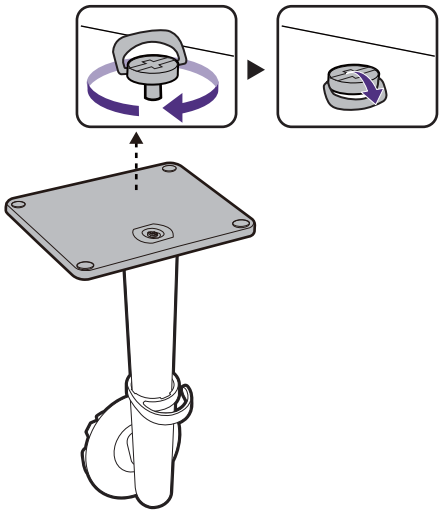

Open the foam wrap that protects the monitor.

Orient and align the stand arm with the monitor (❶), push them together until they click and lock into place (❷).

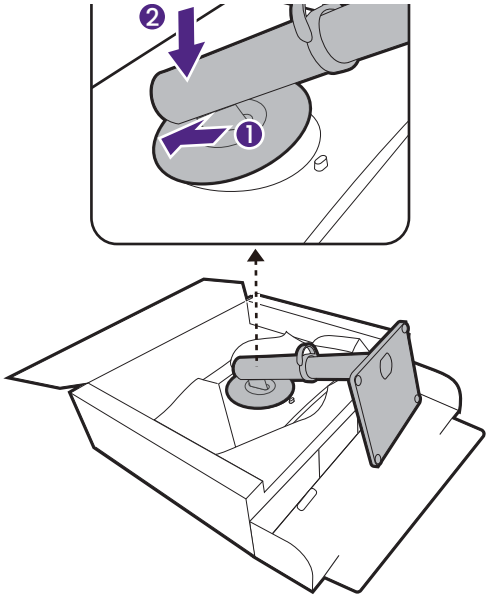

Take the monitor out of the box by holding the stand arm. Carefully lift the monitor, turn it over and place it upright on its stand on a flat even surface.

As the product is heavy, you may need assistance from another person to balance and ensure safety.

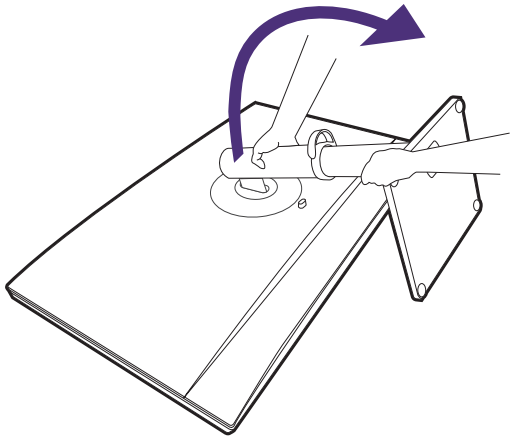

2. Connect the PC video cable.

The video cables included in your package and the socket illustrations in this document may vary depending on the product supplied for your region.

1. Establish a video cable connection. Connect the monitor to your video source(s) via HDMI/DP/Thunderbolt™ cable(s) as illustrated.

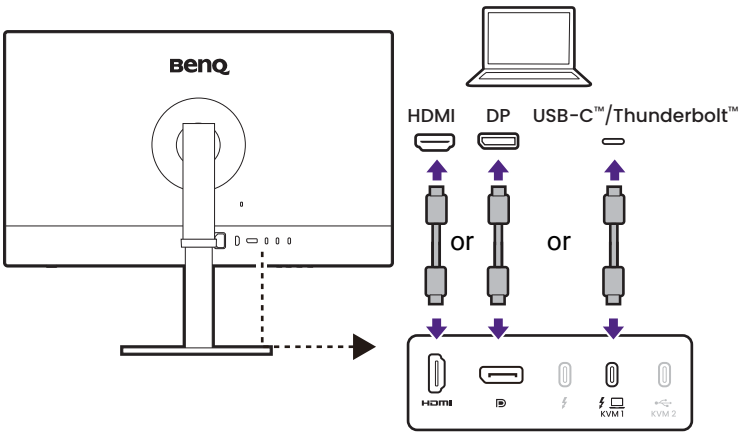

(DP input only) After powering on the monitor and computer, if no image appears, disconnect the DP cable. Connect the monitor to any video source other than DP first. Go to **System** > **Advanced** > **DisplayPort** on the OSD menu of the monitor and change the setting from **1.4** to **1.1**. Once the setting is done, unplug the current video cable and re-connect the DP cable. To access the OSD menu, see 5-way controller and basic menu operations on page 35.

3. Connect the headphone.

You may connect the headphones to the headphone jack.

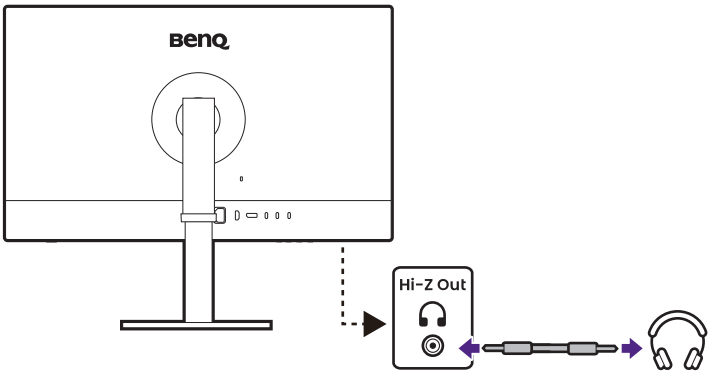

4. Connect the USB devices.

When the video input is HDMI/DP

1. Connect the input source via HDMI or DP.
2. Connect the USB cable between the PC and the monitor (via the USB-C™ data upstream port at the back). This upstream port transmits data between the PC and the USB devices connected to the monitor.
3. Connect USB devices via other USB ports (downstream) on the monitor. These downstream USB ports transmit data between connected USB devices and the upstream port.

When the video input is Thunderbolt™

1. Connect the video source via Thunderbolt™ video port ( ).
2. Connect USB devices via other USB ports (downstream) on the monitor. These downstream USB ports transmit data between connected USB devices and the upstream port.

Video input via HDMI/DP

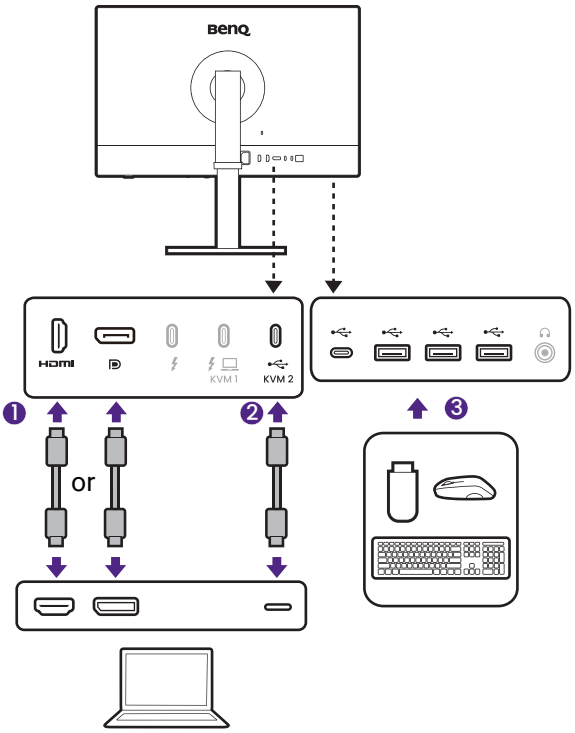

Video input via Thunderbolt™

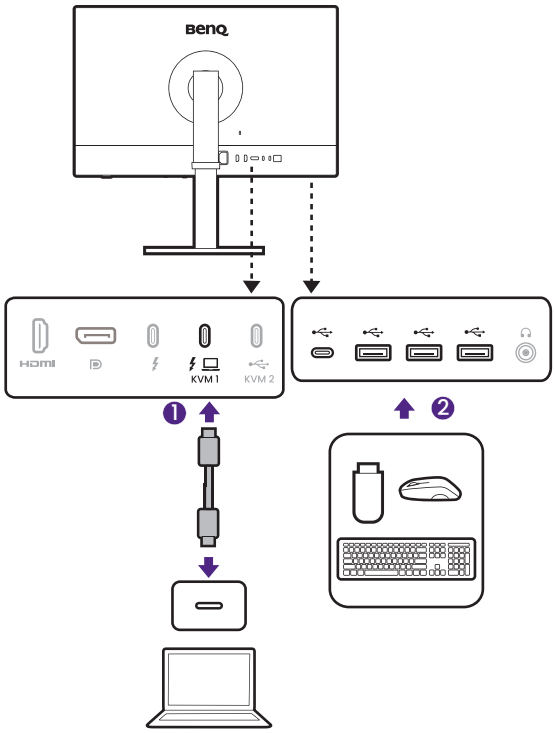

If you tend to use KVM switch, see Sharing a set of keyboard, mouse, and other USB peripherals with KVM on page 46 for appropriate connections and more information.

5. Adjust the viewing angle.

You may position the screen to the desired angle with monitor tilt, swivel, and height adjustment functions. Check the product specifications on the website for details. See Adjusting monitor angles on page 32 for more information.

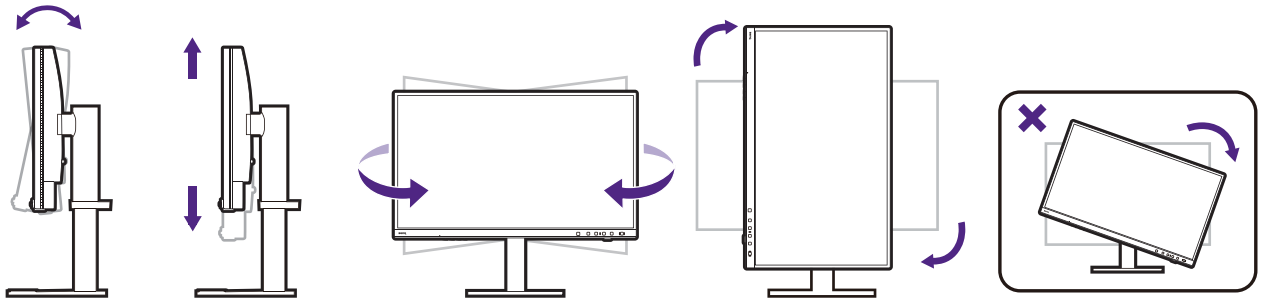

Your monitor is an edge-to-edge monitor and should be handled with care. Avoid finger pressure on the screen surface. Adjust the screen angle by placing your hands on the top and on the bottom of the monitor as illustrated. Excessive force on the display is prohibited.

6. Connect the power cable.

Plug one end of the power cord into the socket labelled ~ on the rear of the monitor.

Plug the other end of the power cord into a power outlet.

Picture may differ from product supplied for your region.

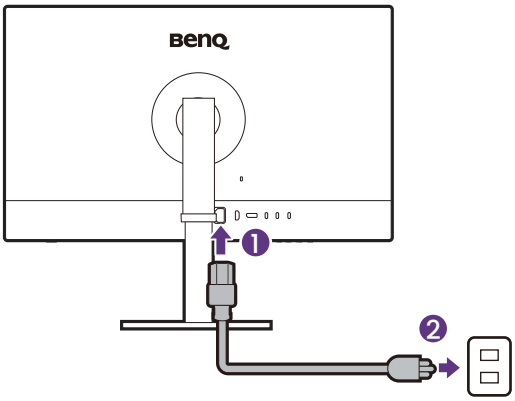

7. Organize the cables.

Route the cables via the cable holder.

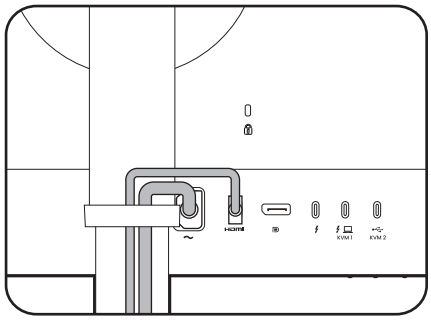

8. Turn on the power.

Turn on the monitor by pressing the power button on the monitor.

Turn on the computer too.

To extend the service life of the product, we recommend that you use your computer's power management function.

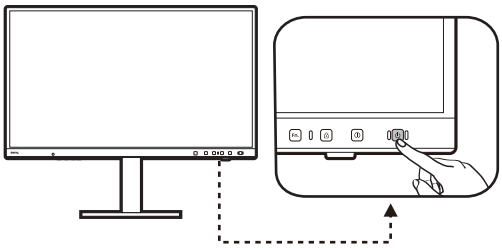

Installing the shading hood

To prevent glare or most of unwanted reflections from other light sources off your screen, you can install the shading hood. It is also required before color calibration.

Please be careful to prevent damage to the shading hood and the monitor. The shading hood is well-designed and can fit into your monitor properly. Do not use excessive force during installation to avoid possible damage.

- You may notice minor indentations on the fleece side of shading hood. This is normal and does not impact its use.
- Avoid finger pressure on the screen surface.

1. Unfold the shading hood.

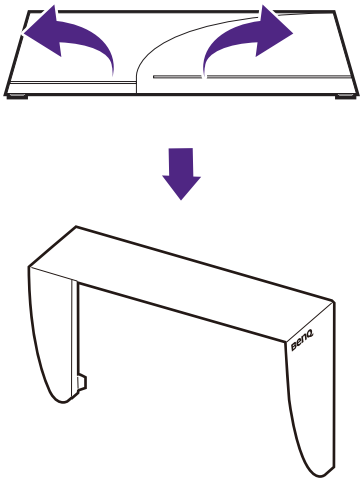

2. Place the shading hood on top of the monitor. Make sure it is properly attached.

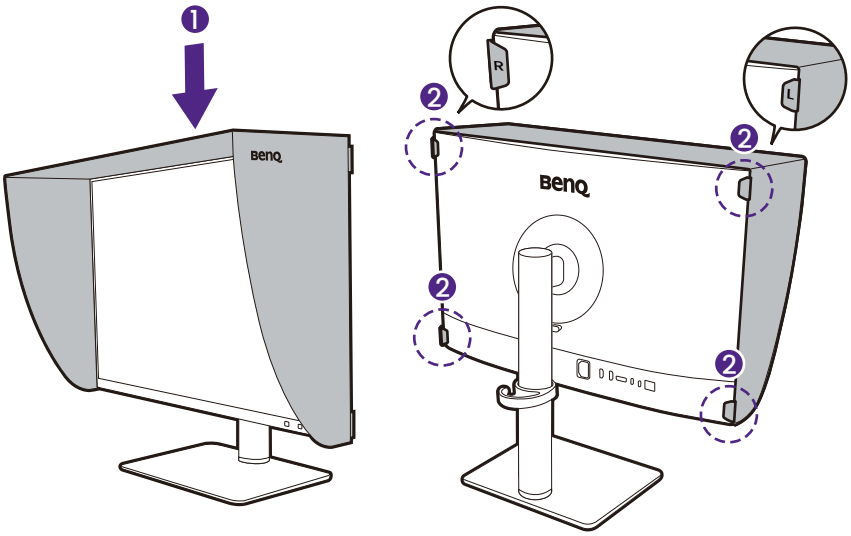

Installing the batteries to Hotkey Puck G4

- Applicable for models with Hotkey Puck G4.
- Battery availability may vary by region. Purchase batteries separately if they are not supplied.
- Check Battery safety notice (applicable if a remote control is provided) whether the batteries are supplied with the product or purchased separately.

1. Turn the battery cover counterclockwise to remove the battery cover.

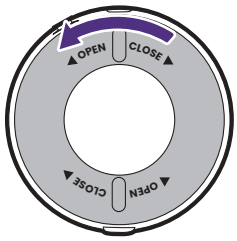

2. Insert two AAA Zinc-Carbon batteries onto the battery holder properly.

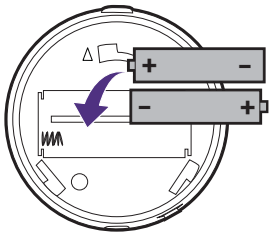

3. Put the battery cover back. Make sure the arrows inside the cover and on the Hotkey Puck G4 are aligned. Turn the battery cover clockwise until you cannot go further.

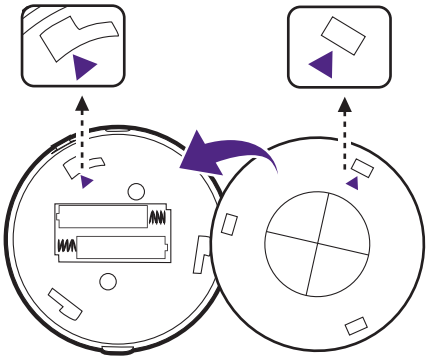

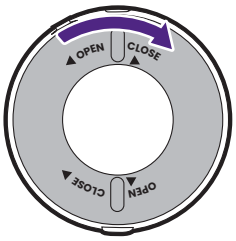

- Keep the batteries out of reach of children.
- If the Hotkey Puck G4 will not be used for an extended period of time, remove the batteries.

Mounting the monitor

The back of your LCD monitor has a VESA standard mount with 100mm pattern, allowing the installation of a wall mount bracket or a monitor arm (both purchased separately). Before starting to mount your monitor, please read the precautions carefully.

You can visit BenQ website for available monitor arms.

Precautions

- Install your monitor and monitor mounting kit on a wall/desk with flat surface.
- Ensure that the wall/tabletop material and the standard wall/desk mount bracket (purchased separately) are stable enough to support the weight of the monitor. Refer to the product specifications on the website for weight information.
- Turn off the monitor and the power before disconnecting the cables from the LCD monitor.

1. Remove the monitor stand.

Lay the screen face down on a clean and well-padded surface. Detach the monitor stand as instructed in How to detach the stand on page 30.

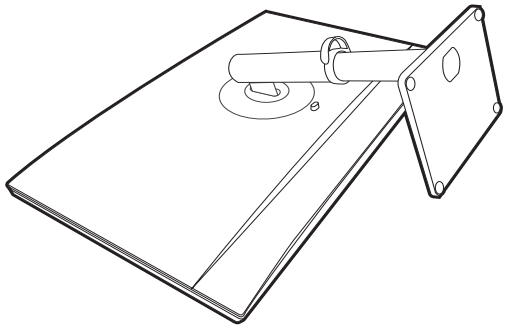

Use a cross-pointed screwdriver to release the screws that fix the back cover to the monitor.The use of a magnetic-head screwdriver is recommended to avoid of losing the screws.

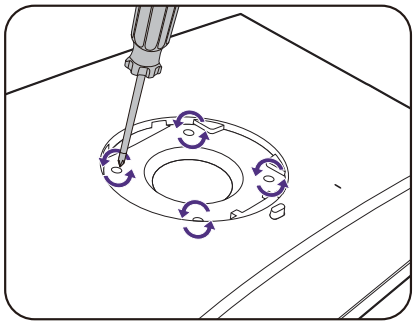

In case you intend to use your monitor on the stand in the future, please keep the monitor base, monitor stand, and screws somewhere safe for future use.

2. Follow the instruction manuals of the wall/desk mount bracket you purchased to complete the installation.

Use four M4 x 10 mm screws to fix a VESA standard wall mount bracket to the monitor. Make sure that all screws are tightened and secured properly. Consult a professional technician or BenQ service for wall mount installation and safety precautions.

How to detach the stand

1. Prepare the monitor and area.

Turn off the monitor and the power before unplugging the power cable. Turn off the computer before unplugging the monitor signal cable.

Protect the monitor and screen by clearing a flat open area on your desk and placing a soft item like a towel on the desk for padding, before laying the screen face down on a flat clean padded surface.

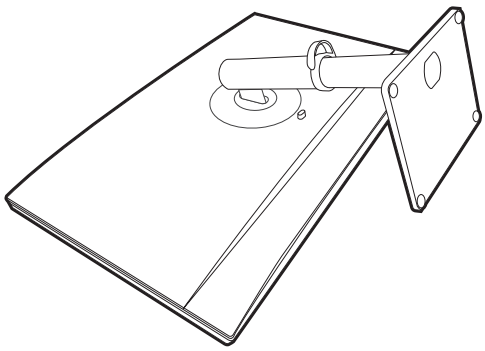

Please be careful to prevent damage to the monitor. Placing the screen surface on an object like a stapler or a mouse will crack the glass or damage the LCD substrate voiding your warranty. Sliding or scraping the monitor around on your desk will scratch or damage the monitor surround and controls.

2. Remove the monitor stand.

While pressing and holding the quick release button, detach the stand from the monitor.

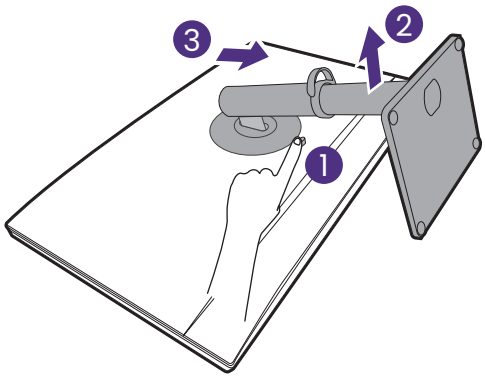

If the monitor stand is removed for wall mounting, see Mounting the monitor on page 34 and the instruction manual of your wall mount bracket (purchased separately) for more information.

3. Remove the monitor base.

Release the thumbscrew on the bottom of the monitor base.

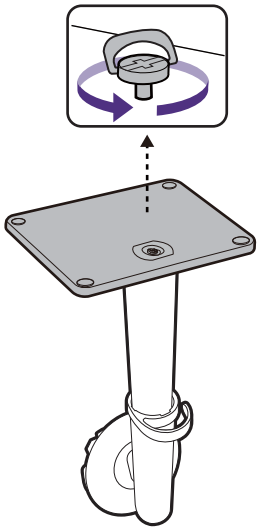

And then detach the base from the stand.

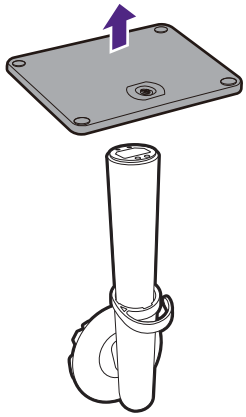

Adjusting monitor angles

Adjusting the monitor height

To adjust the monitor height, hold both the left and the right sides of the monitor to lower the monitor or lift it up to the desired height.

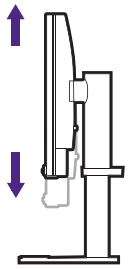

- Avoid placing hands on the upper or lower part of the height-adjustable stand or at the bottom of the monitor, as ascending or descending monitor might cause personal injuries. Keep children out of reach of the monitor while performing this operation.
- If the monitor has been rotated to portrait mode and height adjustment is desired, you should be noted that the wide screen will keep the monitor from being lowered to its minimum height.

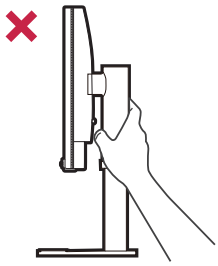

Rotating the monitor

1. Pivot the display.

Before rotating the monitor with a portrait viewing orientation, the display has to be rotated 90 degrees.

Right-click the desktop and select **Screen resolution** from the popup menu. Select **Portrait** in **Orientation**, and apply the setting.

Depending on the operating system on your PC, different procedures should be followed to adjust the screen orientation. Refer to the help document of your operating system for details.

2. Keep enough space for rotation and leave enough cable slack to prevent tension during movement.

3. Fully extend the monitor and tilt it.

Gently lift the display up and extend it to the maximum extended position. Then tilt the monitor.

The monitor should be vertically extended to allow to rotate from landscape to portrait mode.

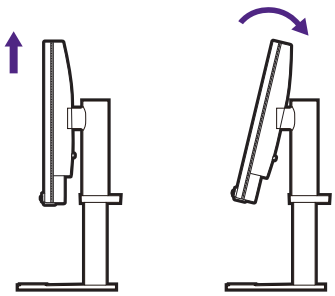

4. Rotate the monitor 90 degrees clockwise as illustrated.

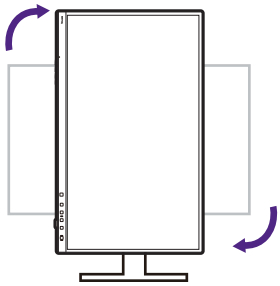

To avoid the edge of the LCD display hitting the monitor base surface while it is being rotated, do tilt and extend the monitor to the highest position before you start to rotate the display. You should also make sure there are no obstacles around the monitor.

5. Once rotated, adjust the height and tilt to your preferred viewing angle. Organize all cables neatly.

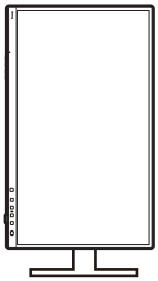

Viewing angle adjustment

You may position the screen to the desired angle with the monitor tilt, swivel, and height adjustment functions. Check the product specifications on the website for details.

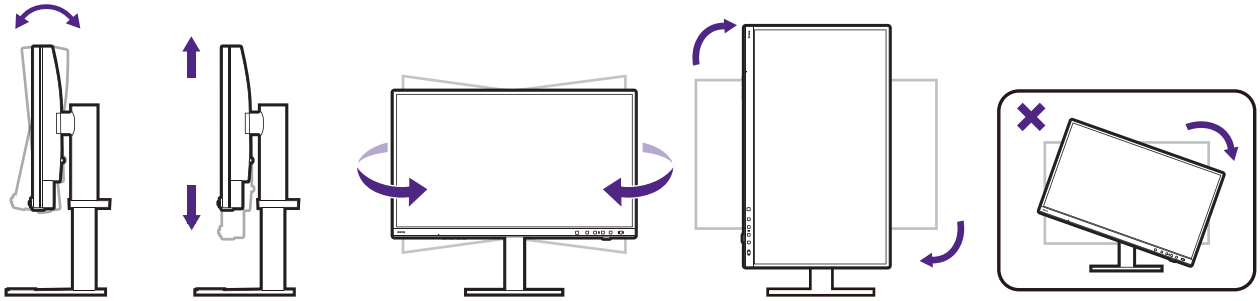

How to adjust your monitor

Controlling the monitor by front access control

All OSD (On Screen Display) menus can be accessed by the control keys. You can use the OSD menu to adjust all the settings on your monitor.

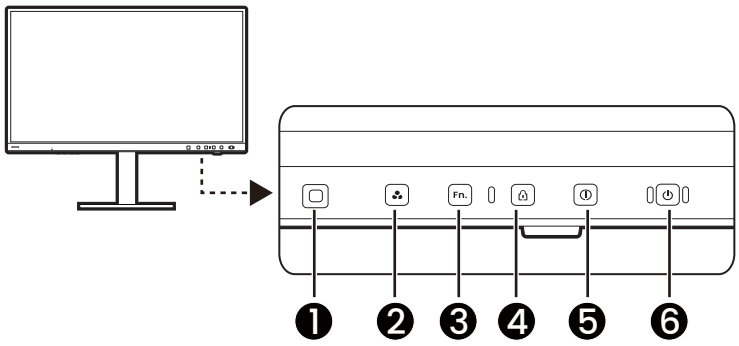

No.	Name	Description
1.	5-way controller	Accesses the functions or menu items as instructed by the on-screen icons. See 5-way controller and basic menu operations on page 35 for more information.
2.	Mode key	Cycles through color modes. To change the mode options accessed by this key, see Accessing commonly used color modes quickly on page 36 for more information.
3.	Function key	• By default, the key is the hot key for **Marker**. • Go to **Custom Key** > **Monitor Function Key** to access the function key setting menu. See Customizing the function key on page 36 for more information.
4.	OSD lock key	Locks OSD menu to prevent unintended adjustments. To unlock the OSD controls, press and hold any key for 10 seconds.
5.	Information key	Brings up the short **Information** menu. See Viewing the current display settings on page 41 for more information.
6.	Power key	Turns the power on or off.

5-way controller and basic menu operations

The 5-way controller is located at the rear of the monitor. While sitting in front of the monitor, move the controller to the directions instructed by the on-screen icons for menu navigation and operations.

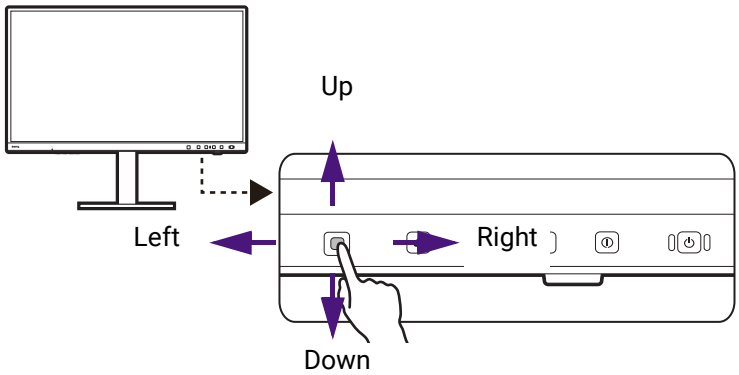

OSD icon	5-way controller operation	Function
(When no menu has been activated)		
N/A	Press the 5-way controller	Activates the main menu.
(When the main menu has been activated)		
	Press	Confirms the selection.
	Move to the right	• Enters sub menus. • Confirms the selection.
	Move up	• Goes to the previous menu item. • For up/increase adjustment.
	Move down	• Goes to the next menu item. • For down/decrease adjustment.
	Move to the left	• Returns to the previous menu. • Exits OSD menu.

All OSD (On Screen Display) menus can be accessed by the control keys. You can use the OSD menu to adjust all the settings on your monitor. Available menu options may vary depending on the input sources, functions and settings.

1. Press the 5-way controller.
2. On the main menu, follow the on-screen icons on the bottom of the menu to make adjustments or selection. See Navigating the main menu on page 50 for details on the menu options.

Personalizing your front access control

To optimize your workflow, you can customize some of the control keys access to frequently used color modes/functions quickly.

Accessing commonly used color modes quickly

Customize the Monitor Mode Key to access only the color modes you use frequently from the front access control.

1. Press the 5-way controller to bring up the main menu.
2. Go to **Custom Key** > **Monitor Mode Key** > **Color Mode**.
3. Select at least 2 items to be accessed quickly by pressing the Monitor Mode Key.

Customizing the function key

1. Press the 5-way controller to bring up the main menu.
2. Go to **Custom Key** > **Monitor Function Key**.
3. On the sub menu, select a category.

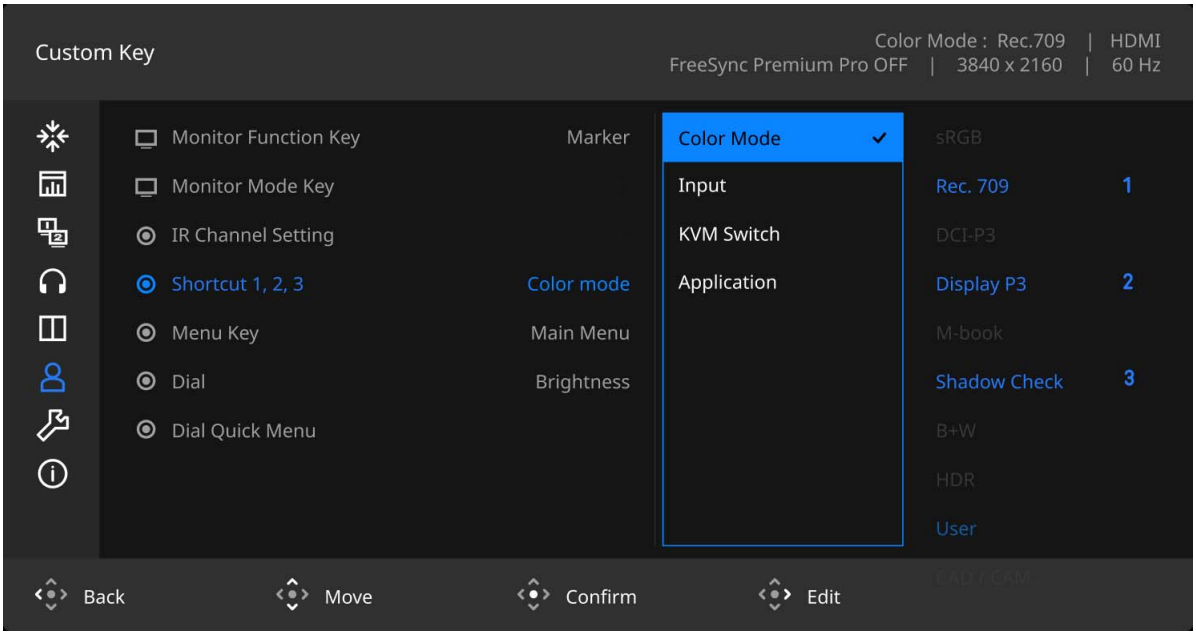

Adjusting the brightness of control keys

To minimize visual distraction while keeping key icons visible in low-light environments, the OSD key brightness is set to medium by default.

To change the OSD key brightness, go to **System** > **Advanced** > **OSD Key Bri.**.

Controlling the monitor remotely by Hotkey Puck G4

The Hotkey Puck G4 (shortened as the puck) is a wireless external controller designed to simplify your monitor adjustments and accelerate your post-production workflow.

The Hotkey Puck G4 comes factory-paired with your monitor out of the box, and it can be paired to control multiple compatible monitors.

Hotkey Puck G4 and its effective range

Applicable for models with Hotkey Puck G4.

1. Follow the instructions in Installing the batteries to Hotkey Puck G4 on page 28 to get the Hotkey Puck G4 ready.
2. Place the Hotkey Puck G4 in front of the monitor. The IR sensor is located on the lower right corner of the monitor with a range of 6 meters approximately at different vertical and horizontal reception angles as illustrated. Place the Hotkey Puck G4 within the effective range to obtain the best performance.
3. To operate with the Hotkey Puck G4, see Hotkey Puck G4 and its basic operations on page 38 for more information.

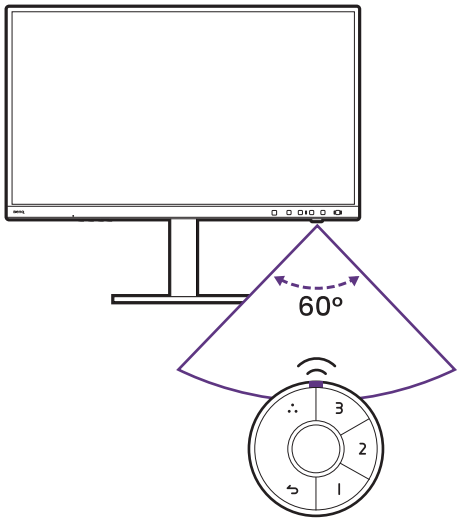

Quick pairing for a single monitor

The monitor and the puck are paired to **Channel 1** by default. Move the channel switch (1 2 3) to 1 to control the monitor remotely.

If you have up to three monitors, make sure they use different channels to avoid interference.

1. Set one monitor to a channel from **Custom Key** > **IR Channel Setting** > **Default Channel**.
2. Set the channel switch on the puck to map with the monitor it goes with.

3. Control a monitor with its puck.

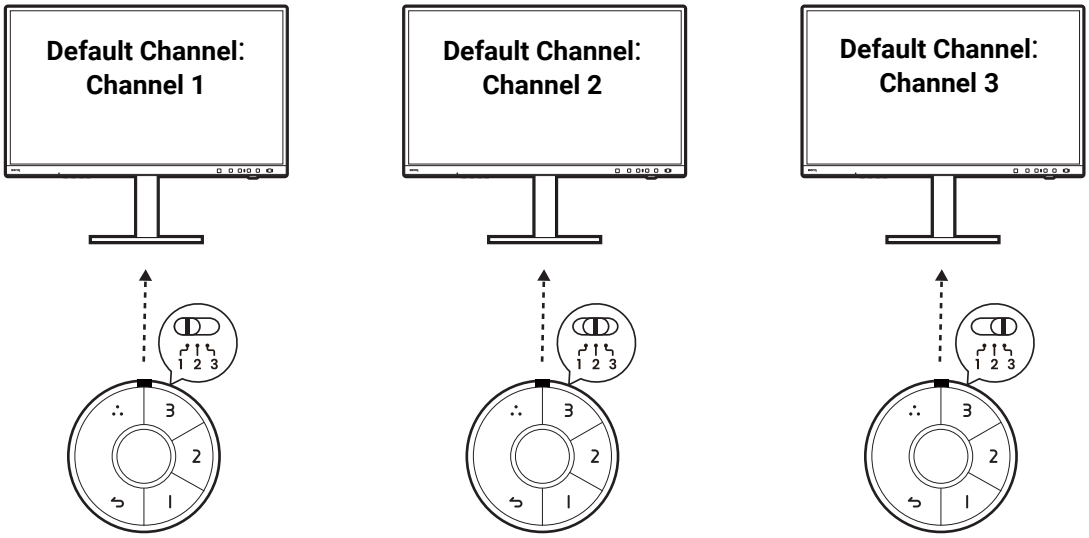

Manual advanced pairing for a single monitor

For efficient side-by-side management of up to thirty monitors, pair each monitor with a dedicated Hotkey Puck G4 on its own IR channel to control settings independently to avoid interference.

1. Set one monitor to a channel from **Custom Key** > **IR Channel Setting** > **Activate Pairing**.
2. Press and hold the Information key (info.) on the puck to enter the pairing mode.
3. Turn the Dial key to switch to an available channel. Press the Dial key to confirm and exit.

To reset IR pairing, go to **Custom Key** > **IR Channel Setting** > **Reset Pairing**. Press and hold the Back (↩) and Information (info.) keys on the puck for 3 seconds.

Hotkey Puck G4 and its basic operations

Hotkey Puck G4 is designed to simplify OSD navigation, providing quick access to menu functions and settings.

Hotkey Puck G4 is designed for BenQ LCD Monitor exclusively and is available for compatible models only. Use it with the bundled monitors only.

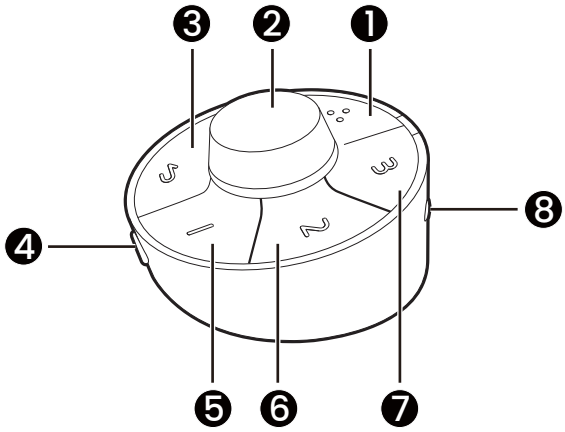

1. Menu key
2. Dial key
3. Return key
4. Information key
5. Shortcut key 1
6. Shortcut key 2
7. Shortcut key 3
8. Channel switch

Button	Action	Description
Menu key	Press	Bring up the main menu.
	Long press for 3 seconds	Bring up the setup menu for customization. See Customizing your Hotkey Puck G4 on page 40.
Return key	Press	• Return to the previous menu. • Exit OSD menu.
	Long press for 3 seconds	Turn the monitor on or off.
Shortcut key 1, 2, 3	Press	Switch to the preset color mode.
	Long press for 3 seconds	Bring up the setup menu for customization. See Customizing your Hotkey Puck G4 on page 40.
Dial key	(When the monitor is turned off)	
	Long press for 3 seconds	Turn on the monitor.
	(When no menu is displayed)	
	Turn right or left	Adjust **Brightness** by default.
	Long press for 3 seconds	Bring up the setup menu for customization. See Customizing your Hotkey Puck G4 on page 40.
	Press	Bring up the **Dial Quick Menu**. See Working with the Dial Quick Menu on page 40.
	(On a menu)	
	Turn right	• Scroll down the menu. • Increase the value.
	Turn left	• Scroll up the menu. • Decrease the value.
	Press	Confirm the selection.
Information key	Press	Show the current display settings.
Channel switch	Switch to channel 1, 2 or 3	Switch the channel to work with different monitor(s). See Quick pairing for a single monitor on page 37 and Independent control via channel switch on page 45 for more information.

Working with the **Dial Quick Menu**

Applicable for models with Hotkey Puck.

The **Dial Quick Menu** is a quick access to frequently used settings such as brightness, volume, contrast, and input.

1. When no menu is displayed, press the Dial key to bring up the **Dial Quick Menu**.

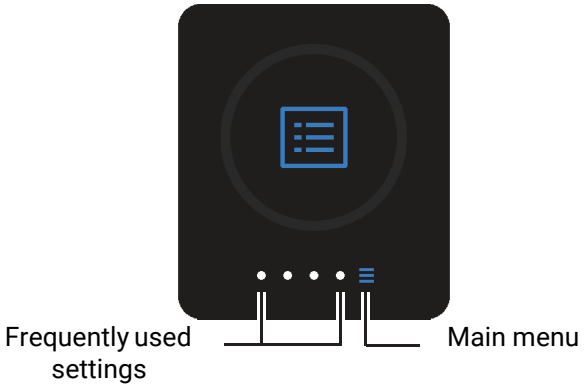

2. Press the Dial key again to bring up the main menu. Or turn the Dial key to access the quick setting options.
3. Press the Dial key to select one of the options. Dial right or left to adjust the value.

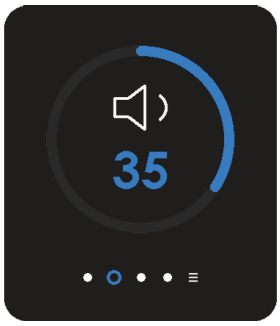

4. Press the Dial key or the Return key to close the **Dial Quick Menu**.

To adjust the setting options displayed on the quick menu, go to **Custom Key** > **Dial Quick Menu**.

Customizing your Hotkey Puck G4

Keys on the Hotkey Puck G4 are designated for particular functions. You can change the default settings of the Dial key, Shortcut keys, and Menu key as desired.

1. Press the 5-way controller.

Alternatively, press and hold a key on the Hotkey Puck G4 for 3 seconds to bring up the setup menu to change the default setting.

2. Go to **Custom Key** and the key you want to customize.
3. Change the function designated for it.

For **Shortcut 1, 2, 3**, select a category on the sub menu. Under the category, check to select 3 items for quick access by the selected key on Hotkey Puck. The numbers displayed by the chosen items refer to the Shortcut Keys that the options are assigned to.

Adjustable OSD settings

While some settings (e.g., OSD language) are changed and take effect immediately regardless of other monitor settings or input, most OSD settings can be adjusted and saved to go with inputs, color modes, or scenarios. As an input, a color mode, or a scenario is selected, the desired settings are applied.

Items	Description
Brightness	Saved and applied by color mode.
Contrast	
Sharpness	
Color Temperature	
Gamma	
Color Gamut	
Hue	
Saturation	
Uniformity	
Backlight Control	
Reset Color	
Other functions	Saved and applied for all modes/inputs.
RGB Range	Saved and applied by input switch.
Display Mode	

Scanning for inputs automatically

You can set the monitor to go through all input ports and scan for available inputs automatically.

Go to **System** > **Input Auto Scan**. Select **ON**. See Auto Input Auto Scan on page 68 for more information. Once enabled, it takes a little more time scanning.

If you rarely switch devices, disable this feature to eliminate scan time and connect directly to your primary input source.

Viewing the current display settings

As the monitor provides various feature and functions, you may have customized the monitor to suit your needs. To find out the current display settings quickly, you can press

the Information key on the monitor or on Hotkey Puck G4 to bring up the short **Information** menu.

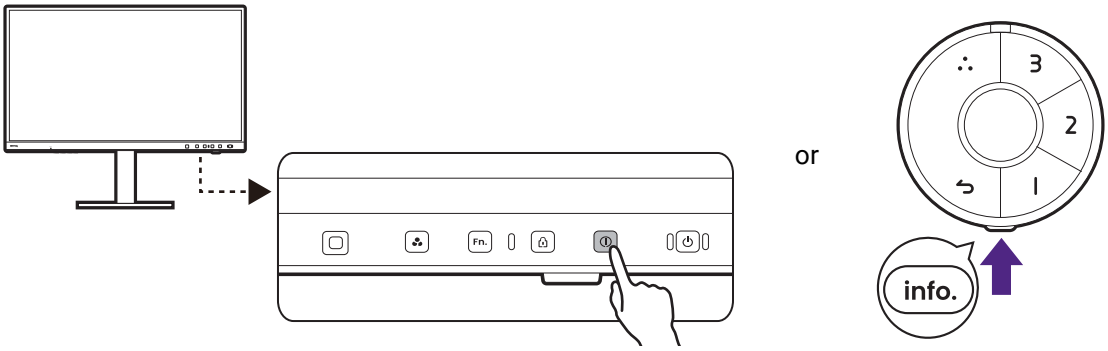

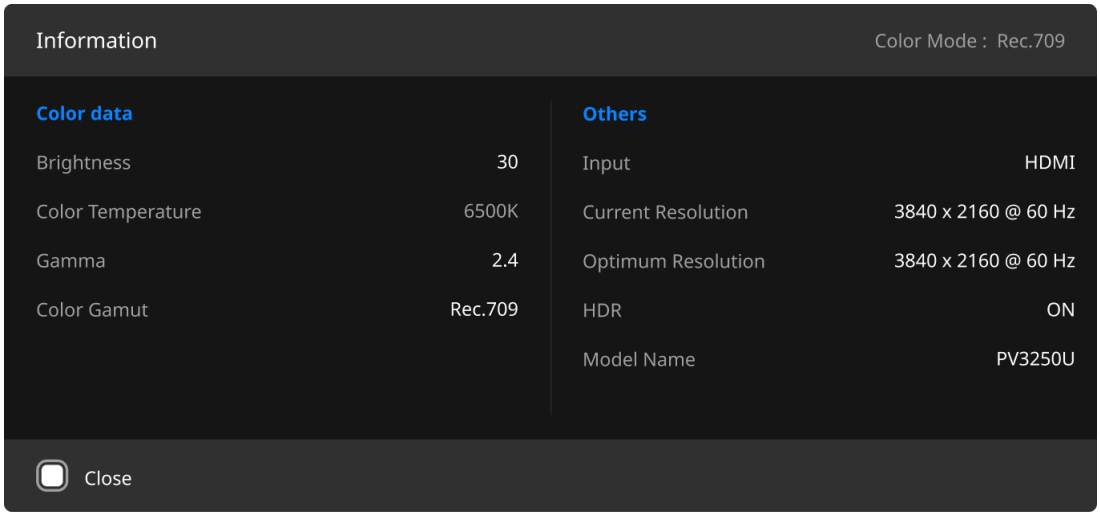

Alternatively, press the 5-way controller, and go to **Information** to view the complete monitor information.

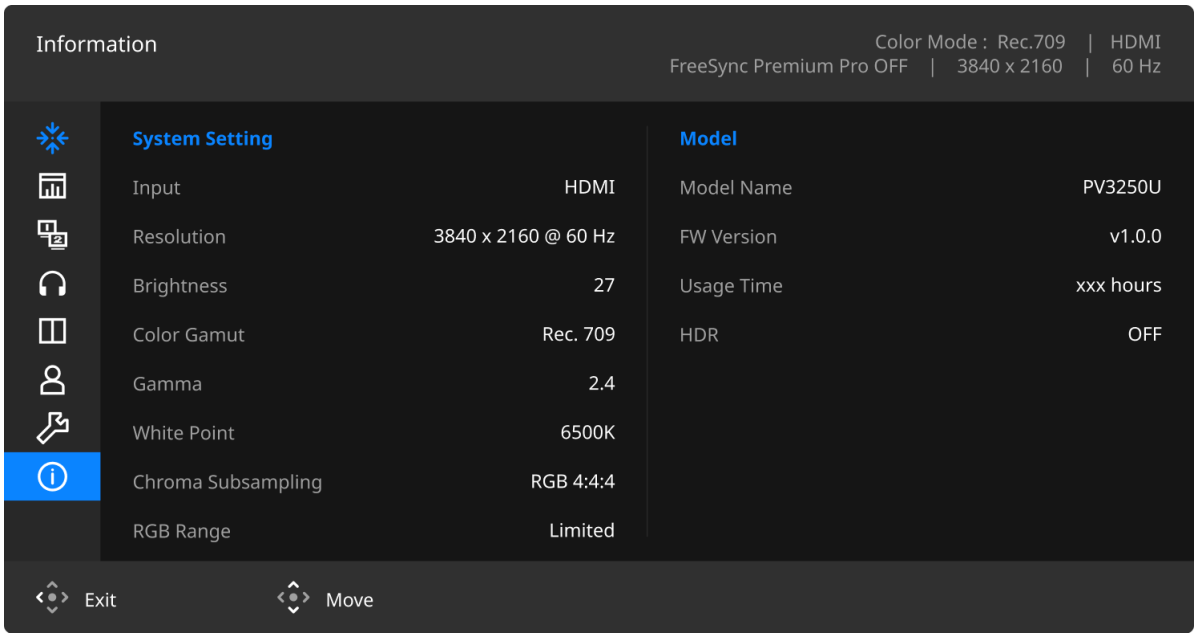

Both information menus show the current color data and monitor information and are for view only. You cannot select or change any item from **Information** menu. Available information varies.

Item	Complete Information menu (from OSD)	Short Information menu (from Information key on the monitor/Hotkey Puck G4)
Input	v	v
Current Resolution / Resolution	v	v
Optimum Resolution		v
Brightness	v	v
Color Gamut	v	v
Gamma	v	v
White Point	v	
Chroma Subsampling	v	
RGB Range	v	
Model Name	v	v
FW Version	v	
Usage Time	v	
HDR	v	v

Brightness of a calibration mode (**Calibration 1**/**Calibration 2**/**Calibration 3** from **Color Mode**) is specified by the cd/m² unit. Brightness percentage is provided for other color modes.

Adjusting **Display Mode**

To display images of aspect ratios other than your monitor aspect ratio and sizes other than your display size, you can adjust the display mode on the monitor.

1. Press the 5-way controller to bring up the main menu.
2. Go to **Display** > **Display Mode**.
3. Select an appropriate display mode. The setting will take effect immediately.

Choosing an appropriate color mode

Your monitor provides various color modes that are suitable for different types of images. See Color Mode on page 54 for all the available color modes.

Go to **Color** > **Color Mode** for a desired color mode.

The computer's color profile (ICC profile) may not best suit your monitor. If you want to make sure to obtain the accurate color matching representation, change the computer's ICC profile to ensure the computer works better with the monitor. Visit Support.BenQ.com to access the **ICC Profile Installation Guide** under your monitor model for instructions. Alternatively, enable the **ICCsync** function from **Display Pilot 2** (page 4). Refer to the **Display Pilot 2** manual for details.

Working with HDR technology

The information regarding HDR-compatible devices and content in this document is most up-to-date at the time of publication. For the latest information, contact your device manufacturer and content provider.

To enable HDR function, you need to have a compatible player and content.

1. Make sure a FHD/4K HDR player is ready. Players with the following names and resolutions are supported. Note that the 4K content on a FHD monitor gets resized and is displayed at 1920 x 1080.

Commonly used names for FHD/4K (may vary by manufacturer)	FHD, 4K, 4K Ultra HD, UHD, UHD 4K, Ultra HD, 2160p
Commonly used names for HDR10 (may vary by manufacturer)	HDR Premium, High Dynamic Range, HDR, Ultra HD Premium

2. Make sure HDR content is available. Content may come from 4K UHD (Blu-ray) or new HDR games on Xbox One S and PS4 Pro.
3. Make sure the player and the monitor have been connected via an appropriate cable:
   - the provided HDMI / DP / DP to mini DP cable / USB-C™ cable / Thunderbolt™ cable (if available)
   - an HDMI cable that is HDMI High Speed or HDMI Premium certified
   - a DP / DP to mini DP cable that is DisplayPort compliance certified
   - a certified USB-C™ cable with DisplayPort Alternate Mode capability

Working with two color settings on the same image (**GamutDuo**)

GamutDuo helps improve your image editing efficiency by showing an image of two different color gamuts side-by-side. This function is available even there is only one video input.

1. Select one color mode from **Color** > **Color Mode**.
2. Go to **GamutDuo** > **Mode** > **ON**. The screen is divided into two windows and the selected color mode is applied to the left window.
3. Go to **GamutDuo** > **Color Gamut** to select a gamut for the window on the right. You can adjust other available settings for the window on the right from **GamutDuo**.

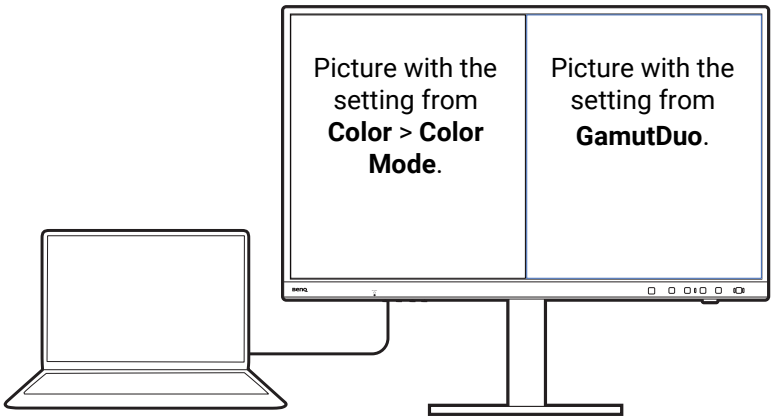

Working with multiple monitors/video sources

Controlling monitors with Hotkey Puck G4

If you work with multiple monitors, you can use separate pucks to control them independently, or use a single puck to control them by switching to the same IR channel.

Note the monitors need to be within the effective range of the puck.

Independent control via channel switch

Consolidate your workspace by using a single Hotkey Puck G4 to manage several monitors. Assign a unique IR channel to each monitor, then use the physical channel switch on the puck to toggle control between screens instantly.

1. Set one monitor to a default channel from **System** > **IR Channel Setting** > **Default Channel**.
2. Switch to the corresponding channel from the puck when you want to control a monitor set to it.

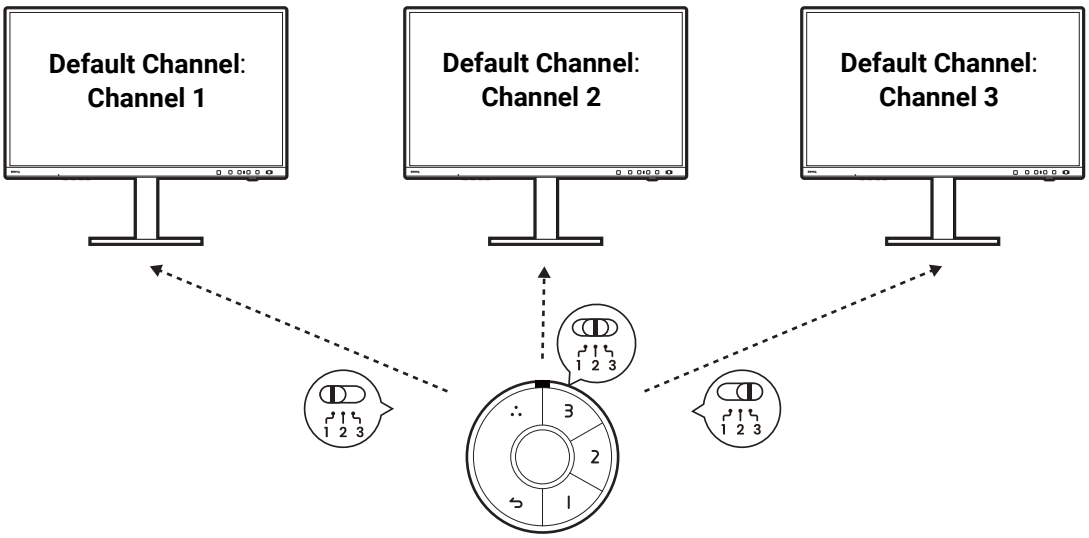

Simultaneous control via a shared channel

As long as the monitors are within the effective range of a puck and are paired to the same IR channel, the puck is able to control the monitors simultaneously.

Avoid using **Channel 1** as the connection/control is easily interfered by other factory-paired monitors or pucks. Perform manual pairing to establish a connection on an open channel.

1. While the puck and the monitors are factory-paired to **Channel 1** out of the box, control the monitors together with one puck and perform pairing. Go to **Custom Key** > **IR Channel Setting** > **Activate Pairing**.
2. Press and hold the Information key (info.) on the puck to enter the pairing mode.
3. Turn the Dial key to switch to another available channel. Press the Dial key to confirm and exit. Both monitors are set to another IR channel.

To manage color settings of more than one monitor efficiently, try **AQCOLOR Pilot**. Visit www.BenQ.com > **AQCOLOR Pilot** for more information.

Sharing a set of keyboard, mouse, and other USB peripherals with KVM

You can shift the control devices (e.g. keyboard and mouse) and other USB peripherals among multiple video sources through KVM.

With appropriate connections, the display is switched to the available inputs while the keyboard and mouse control is switched as well.

Establishing KVM connections

1. Make the first input via the Thunderbolt 4 video port ( ), as this is required for the KVM to function automatically. See Connect the PC video cable. for reference.
2. Make the second input via HDMI or DP connection.
   - HDMI and USB-C™ data upstream ( ) connections
   - DisplayPort and USB-C™ data upstream ( ) connections
3. Connect the control devices and other USB peripherals to the USB ports on the monitor.
4. After the connections are made properly, the KVM Switch function is enabled automatically. You can find out the status from the screen. You can cycle through available KVM sources by changing the input sources.

On the main menu, the KVM status is displayed.

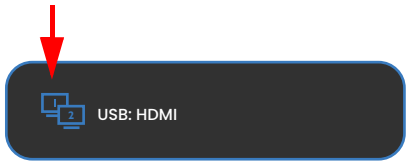

Displaying two sources at the same time (PIP/PBP)

To display two input sources on the screen at the same time, you can go for Picture-in-Picture (PIP) or Picture-by-Picture (PBP) mode.

Video source selection in PIP mode

For first time use, go to **Display** > **PIP**, and press the 5-way controller. Your monitor scans for the available video sources in the following order: Thunderbolt™ 4, DisplayPort, and HDMI, and displays the first available one as the main source in PIP mode, and the second one as the sub source. If only one input signal is found, connect the desired video source with an appropriate cable, and go to **Display** > **PIP** > **Sub** to select the sub source manually. Under **Display** > **PIP** > **Main**, the main source can be changed manually as well.

The monitor keeps the setting of two input sources for future use until the setting is manually changed.

Go to **Display** for more adjustments.

Video source selection in PBP mode

1. Go to **Display** > **PBP**.
2. Select the preferred source for each window.

Go to **Display** for more adjustments.

If you prefer to apply different color modes to images in PIP/PBP mode, see Working with two color settings on the same image (GamutDuo) on page 44.

Connecting multiple monitors via daisy chain

Monitor daisy-chaining allows you to connect multiple monitors together in a single chain rather than plugging each one into your computer. This setup effortlessly expands your workspace across multiple screens.

With monitor connection via Thunderbolt™ 4 ports, you can output content to up to 6 devices (including 2 monitors) via daisy chain function.

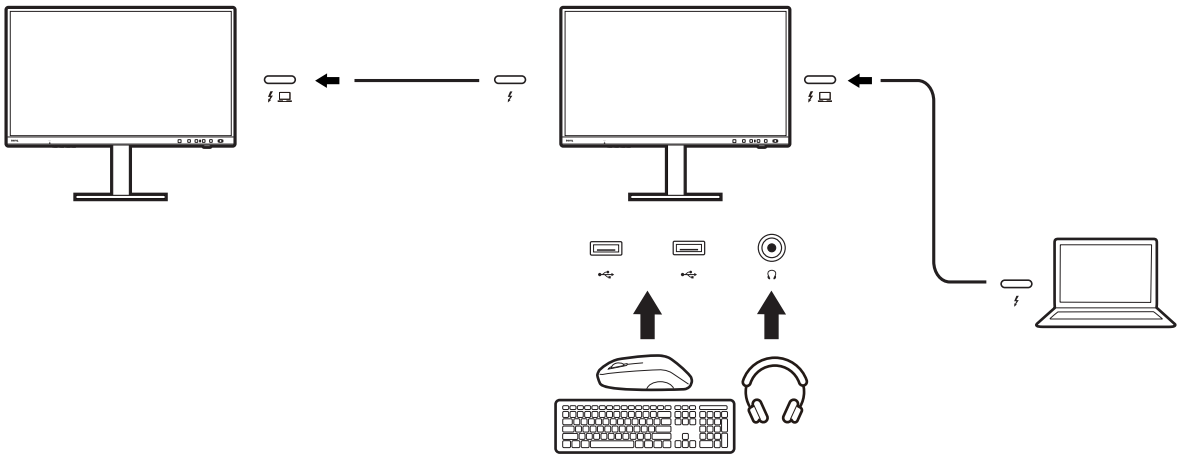

1. Connect your laptop (with Thunderbolt connectivity) to the Thunderbolt™ 4 port ( ) on the monitor using the Thunderbolt™ cable that came with your monitor. This port supplies power to the laptop.
2. Connect the second monitor to the first one using a Thunderbolt™ 4 cable (purchased separately) as illustrated. Make sure the purchased cable is Thunderbolt™ 4-certified (with Thunderbolt™ 4 logo printed on the package and/or on the cable) and is more than one-meter long.
3. Power on the laptop and the monitors.
4. On your laptop, decide the way you want the content to be displayed on the connected monitors: **Duplicate**, **Extend**, or **Second screen only**. Additional software (purchased separately) may be used to manage the display. Refer to the manual of the purchased software for more information.

Supported resolution

To perform Thunderbolt daisy chaining, a limited number of connected monitors is required to ensure image quality. The following information shows the image resolution available to each monitor.

1st monitor	2nd monitor
3840 x 2160 (60 Hz)	3840 x 2160 (60 Hz)

The signal output from a laptop to your monitor is always 3840 x 2160. If multiple monitors are connected, you can adjust each monitor's resolution from the operating system of your laptop.

Please also be noted that the supported number of devices for connection may vary by graphic card. To find out the capability of your graphic card, check its specifications or contact its manufacturer.

Video inspection and preview tools

This monitor features built-in tools that allow you to inspect fine details accurately and preview your content layout across various platforms. Clear image visibility supports a more efficient post-production workflow.

Checking shadow details

The monitor reveals subtle shadow details without highlight overexposure by locking peak brightness and lifting black levels for smooth gradation.

1. The monitor Mode key is for color mode selection by default. Press the Mode key from the front access control, and select **Shadow Check**. Alternatively, go to **Color** > **Color Mode** > **Shadow Check**.

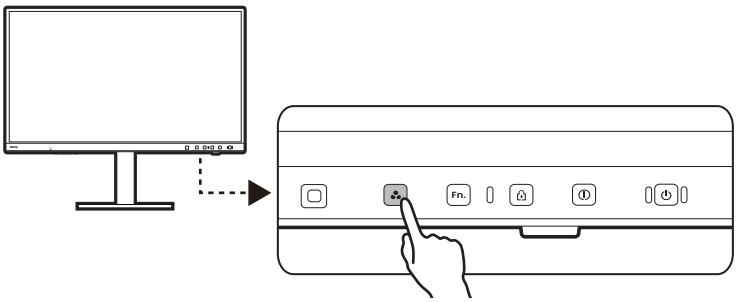

2. Increase the value to intensify the effect.

Zooming in the image

Enlarge the image to see more details.

1. Go to **Display** > **Area Zoom**.
2. Select to enlarge certain area.

Previewing the content output

Use the monitor's built-in markers to preview how your content adapts to different platform aspect ratios. This inspection tool ensures accurate framing and verifies that your final output displays as intended.

1. The monitor Function key is for marker selection by default. Press the Function key from the front access control. Alternatively, go to **Display** > **Marker**.

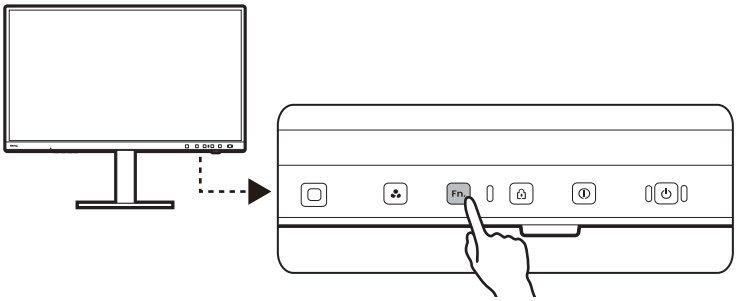

2. Select an aspect ratio to display its corresponding framing border. Any elements outside this frame will be cropped during output. Understanding the specific aspect ratios of your target platforms helps ensure a more accurate layout evaluation.

Monitoring audio clarity

The monitor features a high-impedance (High-Z) headphone jack to help you evaluate audio mix clarity. Connect high-impedance headphones to the monitor to inspect fine audio details and catch subtle imperfections before final delivery.

1. Connect high-impedance headphones to the headphone jack. See Connect the headphone. on page 24 for more information.
2. Adjust gain setting to drive your headphones properly for better sound reproduction. Go to **Headphone** > **Gain**. Select **Hi-Z**.

Navigating the main menu

You can use the OSD (On Screen Display) menu to adjust all the settings on your monitor. Press the 5-way controller to bring up the main menu. See 5-way controller and basic menu operations on page 35 for details.

Available menu options may vary depending on the input sources, functions and settings. Menu options that are not available will become grayed out. And keys that are not available will be disabled and the corresponding OSD icons will disappear. For models without certain functions, their settings and related items will not appear on the menu.

The OSD menu languages may differ from the product supplied to your region, see Language on page 68 under **System** and **OSD Settings** for more details.

For more information on each menu, please refer to the following pages:

- Display menu on page 51
- Color menu on page 54
- KVM Switch menu on page 59
- Headphone menu on page 60
- GamutDuo menu on page 62
- Custom Key menu on page 64
- System menu on page 67
- Information menu on page 71

Display menu

Available menu options may vary depending on the input sources, functions and settings. Menu options that are not available will become grayed out. And keys that are not available will be disabled and the corresponding OSD icons will disappear. For models without certain functions, their settings and related items will not appear on the menu.

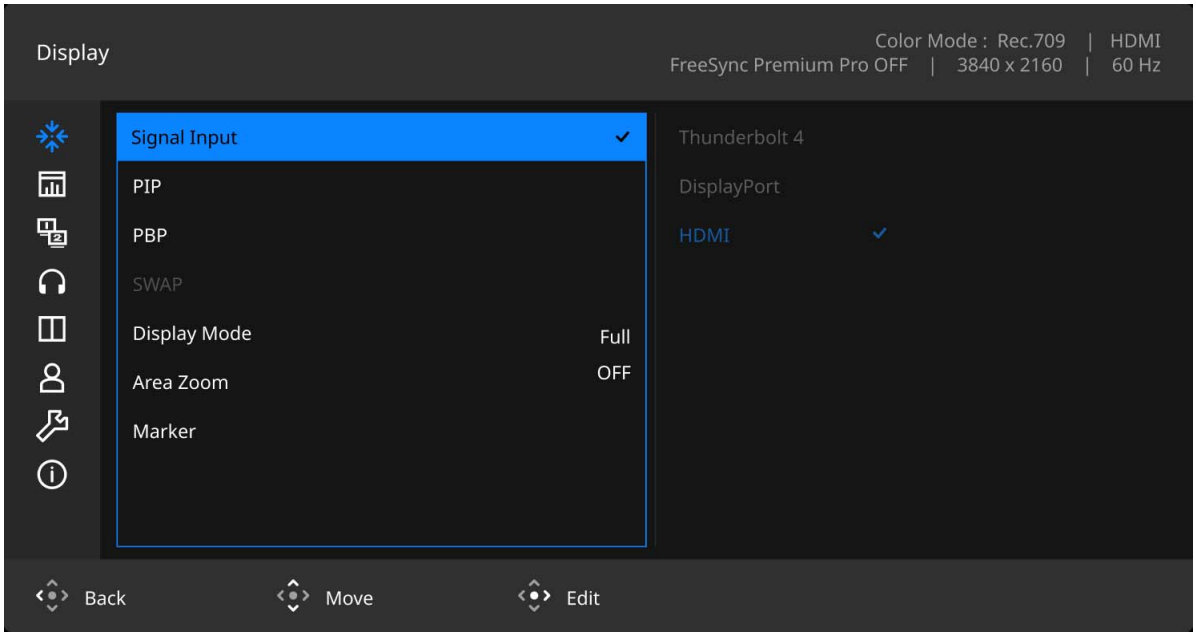

1. Press the 5-way controller to bring up the main menu.
2. Use or to select **Display**.
3. Select to go to a sub menu, and then use or to select a menu item.
4. Use or to make adjustments, or use to make selection.
5. To return to the previous menu, select .
6. To exit the menu, select .

Item	Function	Range
Signal Input	Use this to change the input to that appropriate to your video cable connection type.	• **Thunderbolt 4** • **DisplayPort** • **HDMI**

Item	Function		Range
PIP	Sets the PIP mode. Pictures from two independent video sources are displayed on the screen at the same time. The audio input is from the main source if the PIP mode is activated. Not recommended when HDR function is enabled.		
	Main	Decides the main video source.	• **Thunderbolt 4** • **DisplayPort** • **HDMI**
	Sub	Decides the second video source for PIP mode.	
	PIP Size	Decides the size of the inset window in the PIP mode.	• **Small** • **Medium** • **Large**
	PIP Position	Adjusts the position of the inset window in the PIP mode.	• **Top Right** • **Top Left** • **Bottom Right** • **Bottom Left**
PBP	Sets the PBP mode to have two pictures displayed side-by-side. Determines the video sources for the left and the right windows respectively. Not recommended when HDR function is enabled.		
	Left	Decides the input displayed on the left.	• **Thunderbolt 4** • **DisplayPort** • **HDMI**
	Right	Decides the input displayed on the right.	
SWAP	Videos from the main and the second sources are swapped on the screen.		

Item	Function		Range
Display Mode	This feature is provided to allow aspect ratios other than 16:9 to be displayed without geometric distortion. The options under **Display Mode** will be different depending on the input signal sources. Depending on your selection of **Color Mode**, different **Display Mode** option is pre-set. Change the setting if needed.		
	Full	Scales the input image to fill the screen. Ideal for 16:9 aspect images.	
	Aspect	The input image is displayed without geometric distortion filling as much of the display as possible.	
	1: 1	Displays the input image in its native resolution without scaling.	
Area Zoom	Enlarges a specific screen area to check image details.		• **OFF** • **Center** • **Top Left** • **Top Right** • **Bottom Left** • **Bottom Right**
Marker	Identifies the active output area by displaying a framing border over the image based on your selected aspect ratio.		
	Switch	Switches to different framing borders. Understanding the specific aspect ratios of your target platforms helps ensure a more accurate layout evaluation.	• **OFF** • **Vertical (9:16)** • **Social (3:4)** • **Social (4:5)** • **Square (1:1)** • **Classic (4:3)** • **Cinema (2.35:1)**
	Border Width	Sets the border width of the aspect marker.	• **Thin** • **Medium** • **Bold**
	Border Color	Sets the border color of the aspect marker.	• **Black** • **White** • **Yellow** • **Red**

Color menu

Available menu options may vary depending on the input sources, functions and settings. Menu options that are not available will become grayed out. And keys that are not available will be disabled and the corresponding OSD icons will disappear. For models without certain functions, their settings and related items will not appear on the menu.

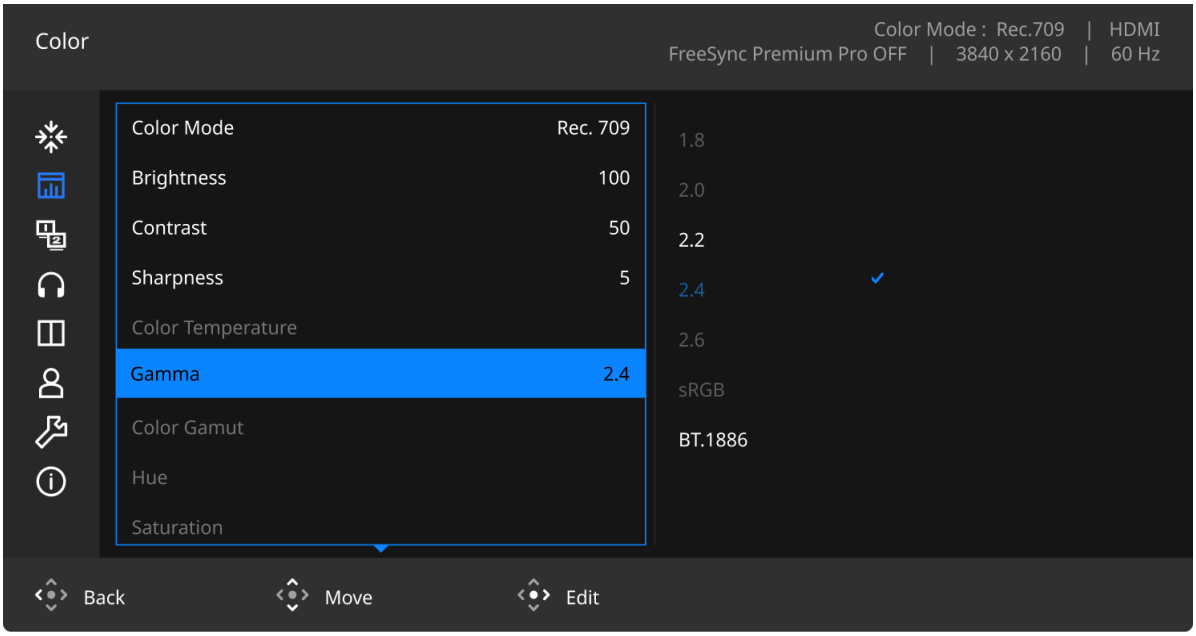

1. Press the 5-way controller to access the main menu.
2. Use or to select **Color**.
3. Select to go to a sub menu, and then use or to select a menu item.
4. Use or to make adjustments, or use to make selection.
5. To return to the previous menu, select .
6. To exit the menu, select .

Item	Function		Range
Color Mode	Select a color mode that best suits the type of images shown on the screen.		
	sRGB	For better color matching representation with the peripheral devices, such as printers, digital cameras, etc.	
	Rec. 709	For better color matching representation with Standard Rec. 709.	
	DCI-P3	For better color matching representation with Standard DCI-P3.	
	Display P3	For better color matching representation with Standard Display P3.	

Item	Function		Range
	M-book	Minimizes the visual differences between the monitor and the connected MacBook series product.	
	Shadow Check	Reveals subtle shadow details without highlight overexposure by locking peak brightness and lifting black levels for smooth gradation. Higher values intensify a stronger effect.	1 ~ 5
	B+W	Applies a black and white theme. Higher values intensify a stronger effect.	1 ~ 3
	HDR	For better color matching representation with High Dynamic Range (HDR) technology. Available only when the HDR content is detected.	• **HDR10** • **HLG**
	User	Applies a combination of picture settings defined by users.	
	Calibration 1	Applies the calibration result optimized by the provided calibration software named **AQCOLOR Pilot** and your calibrator. Visit the website for software download and its user manual. See Advanced software on page 4.	
	Calibration 2		
	Calibration 3		
Brightness	Adjusts the balance between light and dark shades.		0 to 100
Contrast	Adjusts the degree of difference between darkness and lightness.		0 to 100
Sharpness	Adjusts the clarity and visibility of the edges of the subjects in the image.		1 to 10
Color Temperature	**5000K**	Applies a warm tint to the image and is factory pre-set to the news print standard white color.	
	DCI	Applies the standard DCI-P3 color temperature for accurate cinema video and photography evaluation.	
	6500K	Allows video and still photographs to be viewed with natural coloring. This is the factory default color.	

Item	Function		Range
	User Define	The blend of the Red, Green and Blue primary colors can be altered to change the color tint of the image. Go to the succeeding **R** (red), **G** (green), and **B** (blue) menus to change the settings. Decreasing one or more of the colors will reduce their respective influence on the color tint of the image. (e.g. if you reduce the Blue level the image will gradually take on a yellowish tint. If you reduce Green, the image will become a magenta tint.)	• **R** (0~100) • **G** (0~100) • **B** (0~100)
Gamma	Adjusts the tone luminance.		• **1.8** • **2.0** • **2.2** • **2.4** • **2.6** • **sRGB** • **BT.1886**
Color Gamut	**Adobe RGB**	For better color matching representation with Adobe® RGB compatible peripherals.	
	sRGB	For better color matching representation with the peripheral devices, such as printers, digital cameras, etc.	
	Rec. 709	For better color matching representation with Standard Rec. 709.	
	DCI-P3	For better color matching representation with Standard DCI-P3.	
	Rec. 2020	For better color matching representation between two identical monitors with Standard Rec. 2020.	
	Native	For better color matching representation with the native color gamut.	
Hue	Adjusts the degree of how we perceive colors.		• **R** (0~100) • **G** (0~100) • **B** (0~100) • **C** (0~100) • **M** (0~100) • **Y** (0~100)

Item	Function		Range
Saturation	Adjusts the purity degree of colors.		• **R** (0~100) • **G** (0~100) • **B** (0~100) • **C** (0~100) • **M** (0~100) • **Y** (0~100)
Uniformity	Determines the level of consistency in contrast, brightness, and colors across the entire screen. However, if high contract and brightness are desired, please turn off this function.		
	Brightness First	Balances brightness and uniformity.	
	Uniformity First	Compensates the variation in brightness across the display area so the whole display area looks uniform in brightness.	
	OFF (**User** mode only)	Disables uniformity compensation technology.	
RGB Range	Determines the range of color scales. Select an option that matches the RGB range setting on the connected device.		• **Auto** • **Full** • **Limited**
Backlight Control	(Available only when the input is HDR-compatible.) Once enabled, the monitor may flicker when playing HDR content as the backlight changes dynamically with the content. This is a normal phenomenon. You can disable this function as desired.		• **ON** • **OFF**
Reset Color	Resets the custom color settings to the factory defaults.		• **YES** • **NO**

Available menu options to each **Color Mode**

Depending on the **Color Mode** you just set, the available options for color adjustment may vary. The list is for reference only as available options also vary by input. Menu options that are not available will become grayed out.

- V: Available
- X: Not available

	Settings								
Color Mode	**Brightness**	**Contrast**	**Sharpness**	**Color Temp.**	**Color Gamut**	**Gamma**	**Hue**	**Saturation**	**Uniformity**
sRGB	V	V	V	**5000K / 6500K**	X	**2.2 / sRGB**	X	X	V
Rec. 709	V	V	V	X	X	**2.2 / 2.4 / BT.1886**	X	X	V
DCI-P3	V	V	V	X	X	X	X	X	V
Display P3	V	V	V	X	X	X	X	X	V
HDR	V	V	V	X	X	X	X	V	X
M-book	V	V	V	V (Only **User Define** is available)	X	X	X	X	V
Shadow Check	V	V	V	X	X	**2.2 / 2.4 / BT.1886**	X	X	V
B+W	V	V	V	X	X	X	X	X	V
User	V	V	V	V	V	V	V	V	V
Calibration 1 / Calibration 2 / Calibration 3	X	X	V	X	X	X	X	X	X

KVM Switch menu

Available menu options may vary depending on the input sources, functions and settings. Menu options that are not available will become grayed out. And keys that are not available will be disabled and the corresponding OSD icons will disappear. For models without certain functions, their settings and related items will not appear on the menu.

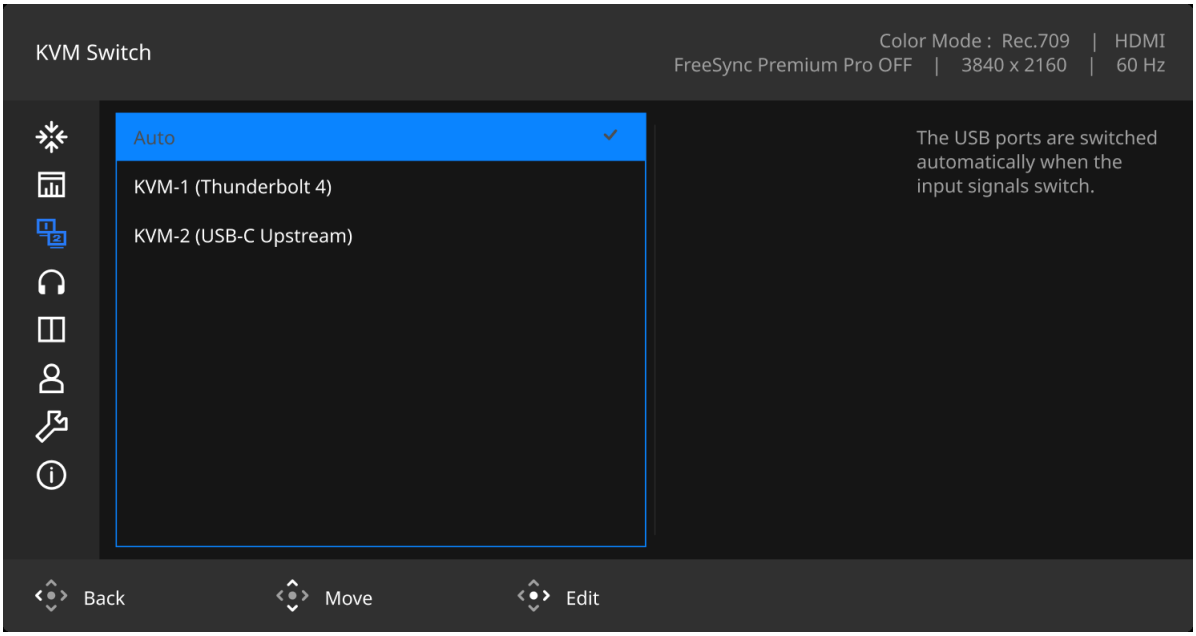

1. Press the 5-way controller to access the main menu.
2. Use or to select **KVM Switch**.
3. Select to go to a sub menu, and then use or to select a menu item.
4. Use or to make adjustments, or use to make selection.
5. To return to the previous menu, select .
6. To exit the menu, select .

Item	Function	Range
Auto	The USB ports are switched automatically when the input signals switch.	
KVM-1(Thunder bolt 4)	Switches the keyboard and mouse control over the input source/display connected to the USB-C™ video port.	
KVM-2(USB-C Upstream)	Switches the keyboard and mouse control over the input source/display connected to the HDMI or DP port.	

See Sharing a set of keyboard, mouse, and other USB peripherals with KVM on page 46 for more information.

Headphone menu

Available menu options may vary depending on the input sources, functions and settings. Menu options that are not available will become grayed out. And keys that are not available will be disabled and the corresponding OSD icons will disappear. For models without certain functions, their settings and related items will not appear on the menu.

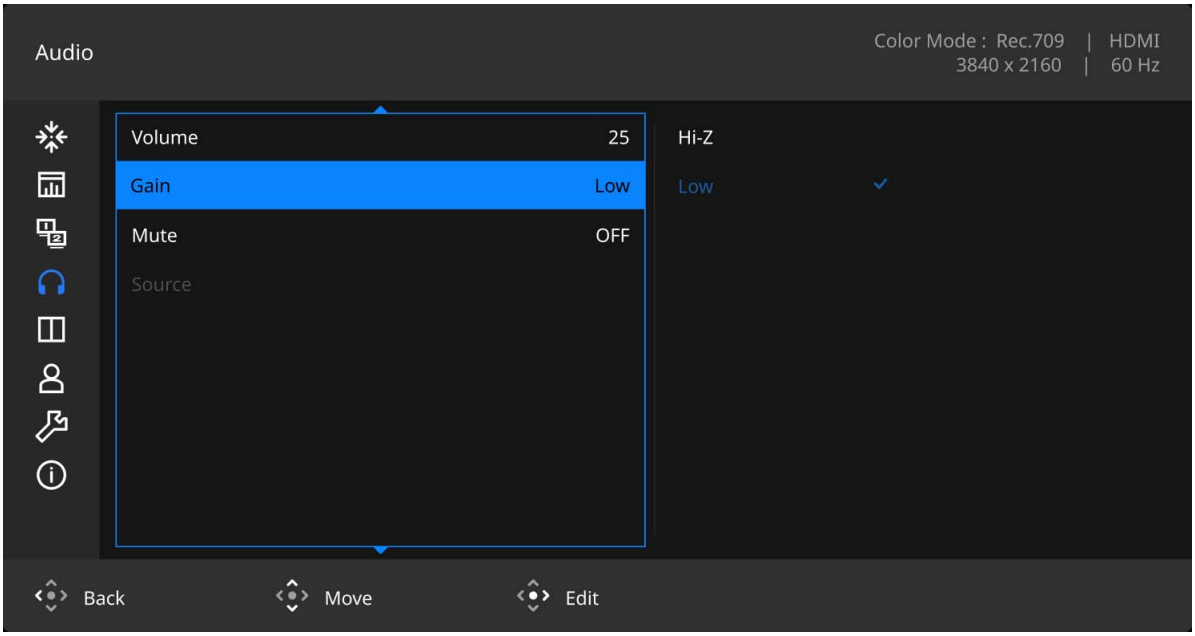

1. Press the 5-way controller to access the main menu.
2. Use or to select **Headphone**.
3. Select to go to a sub menu, and then use or to select a menu item.
4. Use or to make adjustments, or use to make selection.
5. To return to the previous menu, select .
6. To exit the menu, select .

Item	Function	Range
Volume	Adjusts the audio volume.	0 ~ 50
Gain	Your monitor comes with a built-in DAC. You need to adjust gain setting to drive your headphone properly for better sound reproduction. For high-impedance headphones, select **Hi-Z**. For low-impedance headphones, select **Low**. Please use the **Hi-Z** setting only with high-impedance audio equipment. Do not use the **Hi-Z** setting with low-impedance devices, as it poses a risk of damage. Choose safely to ensure optimal performance and equipment safety.	• **Hi-Z** • **Low**

Item	Function	Range
Mute	Mutes the audio input.	• **ON** • **OFF**
Source	Switches the audio input from one source to the other. If you have audio input from both sources, the monitor's speakers output the audio signals from the main screen by default.	• **Main** • **Sub**

See Sharing a set of keyboard, mouse, and other USB peripherals with KVM on page 46 for more information.

GamutDuo menu

Available menu options may vary depending on the input sources, functions and settings. Menu options that are not available will become grayed out. And keys that are not available will be disabled and the corresponding OSD icons will disappear. For models without certain functions, their settings and related items will not appear on the menu.

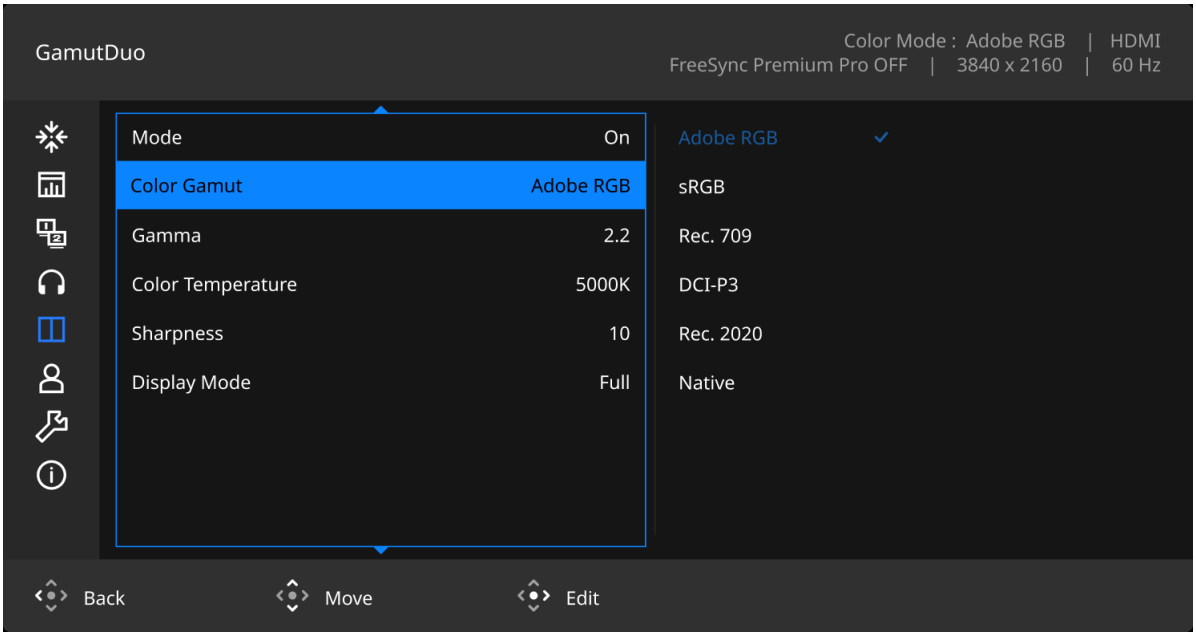

1. Press the 5-way controller to access the main menu.
2. Use or to select **GamutDuo**.
3. Select to go to a sub menu, and then use or to select a menu item.
4. Use or to make adjustments, or use to make selection.
5. To return to the previous menu, select .
6. To exit the menu, select .

Item	Function	Range
Mode	Enables/disables **GamutDuo**.	• **ON** • **OFF**
Color Gamut	Reproduces the color gamut set by specified standards of the window on the right.	• **Adobe RGB** • **sRGB** • **Rec. 709** • **DCI-P3** • **Rec. 2020** • **Native**

Item	Function	Range
Gamma	Adjusts the tone luminance of the window on the right.	• **1.8** • **2.0** • **2.2** • **2.4** • **2.6** • **sRGB** • **BT.1886**
Color Temperature	Applies a color tint (cool or warm) to the image of the window on the right. Color temperature is measured in K (Kelvin) degrees. The display becomes reddish if the color temperature is low, and becomes bluish if the color temperature is high.	• **5000K** • **DCI** • **6500K**
Sharpness	Adjusts the sharpness of the window on the right. To adjust the contrast and the sharpness of the main source, go to the **Color** menu. See page 54 for more information.	0 ~ 10
Display Mode	Adjusts the display more of the window on the right.	• **Full** • **Aspect**

Custom Key menu

Available menu options may vary depending on the input sources, functions and settings. Menu options that are not available will become grayed out. And keys that are not available will be disabled and the corresponding OSD icons will disappear. For models without certain functions, their settings and related items will not appear on the menu.

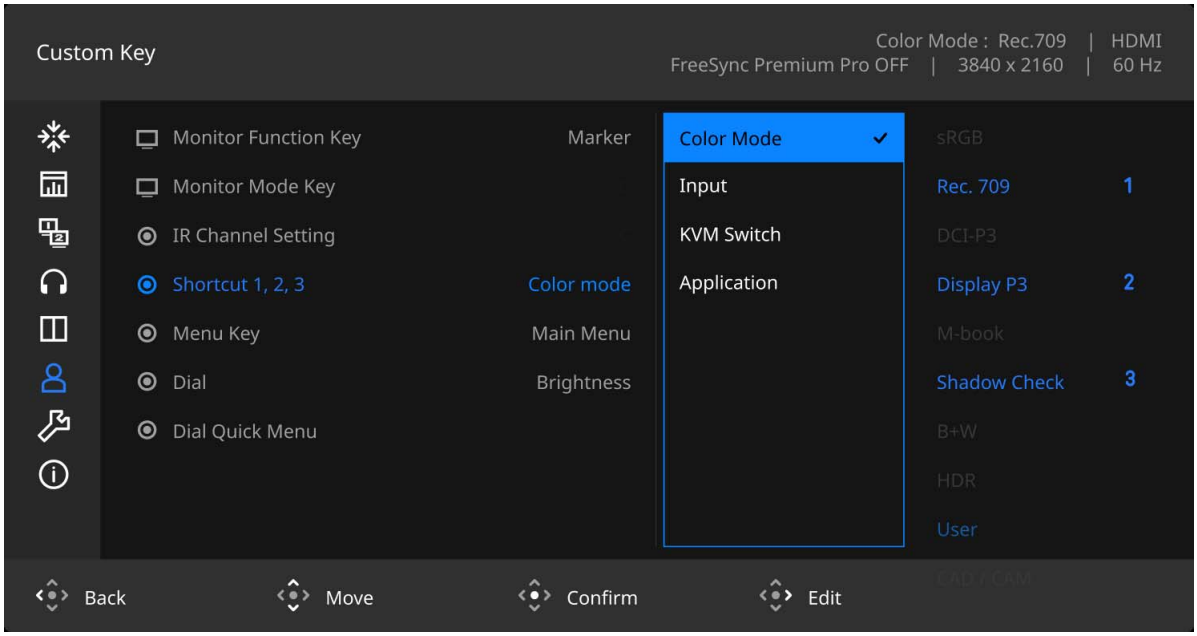

1. Press the 5-way controller to access the main menu.
2. Use or to select **Custom Key**.
3. Select to go to a sub menu, and then use or to select a menu item.
4. Use or to make adjustments, or use to make selection.
5. To return to the previous menu, select .
6. To exit the menu, select .

Item	Function	Range
Monitor Function Key	Sets the function to be accessed by Function key.	• **Area Zoom** • **Marker** • **Input** • **KVM Switch**

Item	Function		Range
Monitor Mode Key	Sets the color modes to be accessed by Mode key. Select at least 2 items.		• **sRGB** • **Rec. 709** • **DCI-P3** • **Display P3** • **M-book** • **Shadow Check** • **B+W** • **HDR** • **User** • **Calibration 1** • **Calibration 2** • **Calibration 3**
IR Channel Setting	Sets the monitor to map with the Hotkey Puck G4 for easy OSD control. See Controlling monitors with Hotkey Puck G4 on page 45 for more information.		
	Default Channel	Sets a monitor to a default channel for remote control. The default setting is **Channel 1**. To prevent signal interference, change the default setting if you have multiple monitors that support Hotkey Puck G4.	• **Channel 1** • **Channel 2** • **Channel 3**
	Activate Pairing	Sets a monitor to a preferred channel manually. You can set up to 30 channels. After a successful pairing, the monitor will display a message confirming which IR channel it is now bound to. The default setting is **Channel 1**. To prevent signal interference, change the default setting if you have multiple monitors that support Hotkey Puck G4.	
	Pairing Channel	Shows the paired channel.	
	Reset Pairing	Unpairs a monitor and its Hotkey Puck G4.	
Shortcut 1, 2, 3	Sets the function to be accessed by Shortcut key 1 / 2 / 3 on Hotkey Puck G4. See Hotkey Puck G4 and its basic operations on page 38 for the location of the keys. Select a category first, and choose at least 3 options to be accessed by these keys. The numbers displayed next to the selected items are the shortcut keys that the options are designated to.		• **Color Mode** • **Input** • **KVM Switch** • **Application**

Item	Function	Range
Menu Key	Sets the function to be accessed by the Menu key on Hotkey Puck G4. See Hotkey Puck G4 and its basic operations on page 38 for the location of the key. Select a category first, and choose options to be accessed by this key. Selection limits depend on the category.	• **Main Menu** • **Color Mode** • **Input** • **KVM Switch** • **Area Zoom** • **Marker** • **Mute**
Dial	Sets the function to be accessed by the Dial key on Hotkey Puck G4. See Hotkey Puck G4 and its basic operations on page 38 for the location of the key.	• **Brightness** • **Contrast** • **Volume**
Dial Quick Menu	Sets the function to be accessed by the Dial Quick menu from Hotkey Puck G4. See Working with the Dial Quick Menu on page 40 for more information.	• **Brightness** • **Volume** • **Input** • **Contrast**

System menu

Available menu options may vary depending on the input sources, functions and settings. Menu options that are not available will become grayed out. And keys that are not available will be disabled and the corresponding OSD icons will disappear. For models without certain functions, their settings and related items will not appear on the menu.

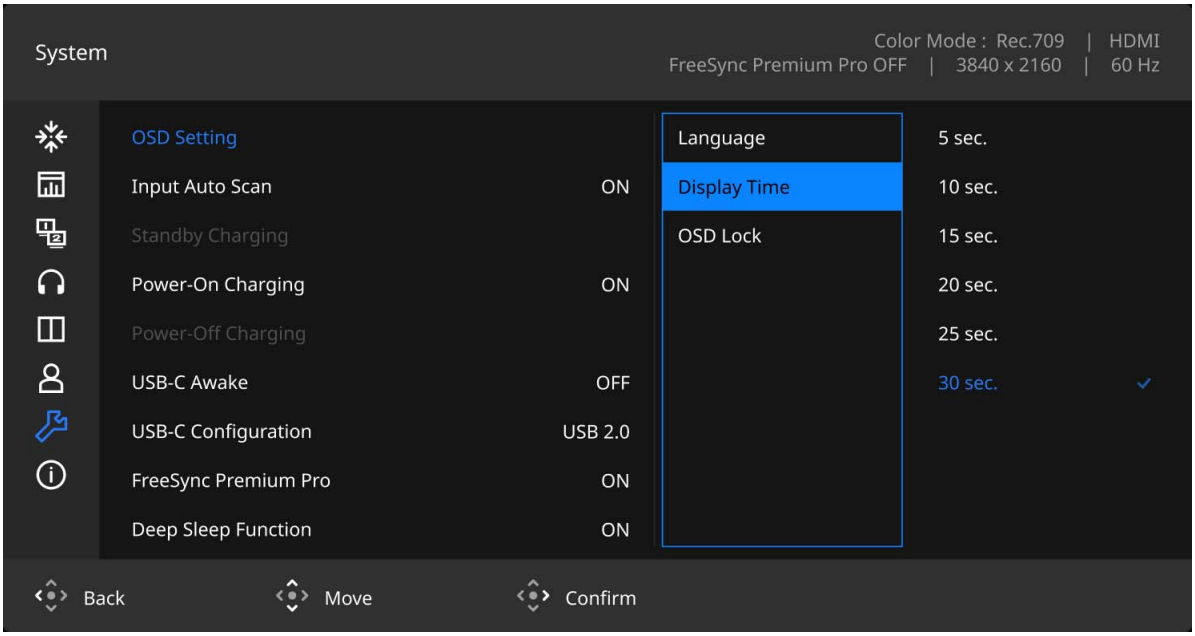

1. Press the 5-way controller to access the main menu.
2. Use or to select **System**.
3. Select to go to a sub menu, and then use or to select a menu item.
4. Use or to make adjustments, or use to make selection.
5. To return to the previous menu, select .
6. To exit the menu, select .

Item	Function		Range
OSD Settings	**Language**	Sets the OSD menu language. The language options displayed on your OSD may differ from those shown on the right, depending on the product supplied in your region.	• **English** • **Français** • **Deutsch** • **Italiano** • **Español** • **Polski** • **Česky** • **Magyar** • **Română** • **Nederlands** • **Svenska** • **Português** • **日本語** • 繁體中文 • **简体中文** • **Українська** • **Български** • **Ελληνικά** • **Русский** • **한국어** • العربية
	Display Time	Adjusts the display time of the OSD menu.	• **5 sec.** • **10 sec.** • **15 sec.** • **20 sec.** • **25 sec.** • **30 sec.**
	OSD Lock	Prevents all the monitor settings from being accidentally changed. When this function is activated, the OSD controls and hotkey operations will be disabled. To unlock the OSD controls, press and hold any key for 10 seconds.	
Input Auto Scan	Sets to automatically detect the available input source.		• **ON** • **OFF**
Standby Charging	Keep your Thunderbolt™/USB-C™ and Hub charging in standby mode when both **USB-C Awake** and **Power-On Charging** are **ON**.		• **ON** • **OFF**

Item	Function		Range
Power-On Charging	Keep your Thunderbolt™/USB-C™ upstream charging your device; disabling **Power-On Charging** also disables **Standby Charging**.		• **ON** • **OFF**
Power-Off Charging	Keep your Thunderbolt™/USB-C™ and Hub charging in power-off mode when **USB-C Awake** is **ON**.		• **ON** • **OFF**
USB-C Awake	When both **Power-On Charging** and **Standby Charging** are **ON**, this feature allows your connected device to wake the monitor from standby mode via USB-C™ or Hub.		• **ON** • **OFF**
USB-C Configuration	Sets the refresh rate of the input video via Thunderbolt™ 4 port. The USB transmission speed changes accordingly due to Thunderbolt™ technology limitation.		
	USB 2.0	Refresh rate: 3840 x 2160 @ 120Hz USB transmission speed: 480 Mbps	
	USB 3.2	Refresh rate: 3840 x 2160 @ 30Hz USB transmission speed: 5 Gbps	
FreeSync Premium Pro	Switches FreeSync Premium Pro on or off. Monitors featuring with the FreeSync will eliminate screen tearing, stuttering, and juddering during gaming. If this function is enabled, the FreeSync and HDR functions are activated, with the support of your monitor, the graphic card, and the input of HDR content. Available FreeSync function varies by content. For any questions related to FreeSync™ performance please refer to www.AMD.com.		• **ON** • **OFF**
Deep Sleep Function	Sets to enable/disable deep sleep (power-saving) mode. • If enabled, the monitor enters deep sleep mode when the power button is pressed, consuming less power. • If disabled, the monitor turns off the backlight without entering deep sleep mode when the power button is pressed. This allows the monitor to wake up more quickly and recover from sleep mode in a shorter time.		• **ON** • **OFF**

Item	Function		Range
Advanced	**DDC/CI**	Allows the monitor settings to be set through the software on the PC. DDC/CI, short for Display Data Channel/Command Interface, was developed by Video Electronics Standards Association (VESA). DDC/CI capability allows monitor controls to be sent via the software for remote diagnostics.	• **ON** • **OFF**
	Auto Power Off	Sets the time to power off the monitor automatically in power saving mode.	• **OFF** • **10 min.** • **20 min.** • **30 min.**
	DisplayPort	Selects an appropriate DP standard for data transmission.	• **1.1** • **1.4**
	OSD Key Bri.	Adjusts the brightness of the power key's LED indicator.	• **High** • **Medium** • **Low** • **OFF**
	AMA	Improves the gray level response time of the LCD panel.	• **OFF** • **High** • **Premium**
Burn-in Cleaner	Screen burn-in or image retention may be found on the screen if a still image is displayed for an extended period of time. Enable this function to help reduce the visible fixed lines or shades on the screen by showing several default patterns. Once enabled, to disable this function, press any of the control keys. Screen burn-in occurs due to panel limitation and should not be considered as a manufacturing defect. To avoid screen burn-in, do not play a still image for an extended period of time in the first place. Use your computer's power management function.		• **YES** • **NO**
Software	Displays the QR code of **Calibration Software** (**AQCOLOR Pilot**) and **Productivity Tool** (**Display Pilot 2**). Scan for quick access to the software download page. The software should be installed on your computer to work with the monitor.		• **Calibration Software** • **Productivity Tool**
Reset All	Resets all mode, color and geometry settings to the factory default values.		• **YES** • **NO**

Information menu

Available menu options may vary depending on the input sources, functions and settings. Menu options that are not available will become grayed out. And keys that are not available will be disabled and the corresponding OSD icons will disappear. For models without certain functions, their settings and related items will not appear on the menu.

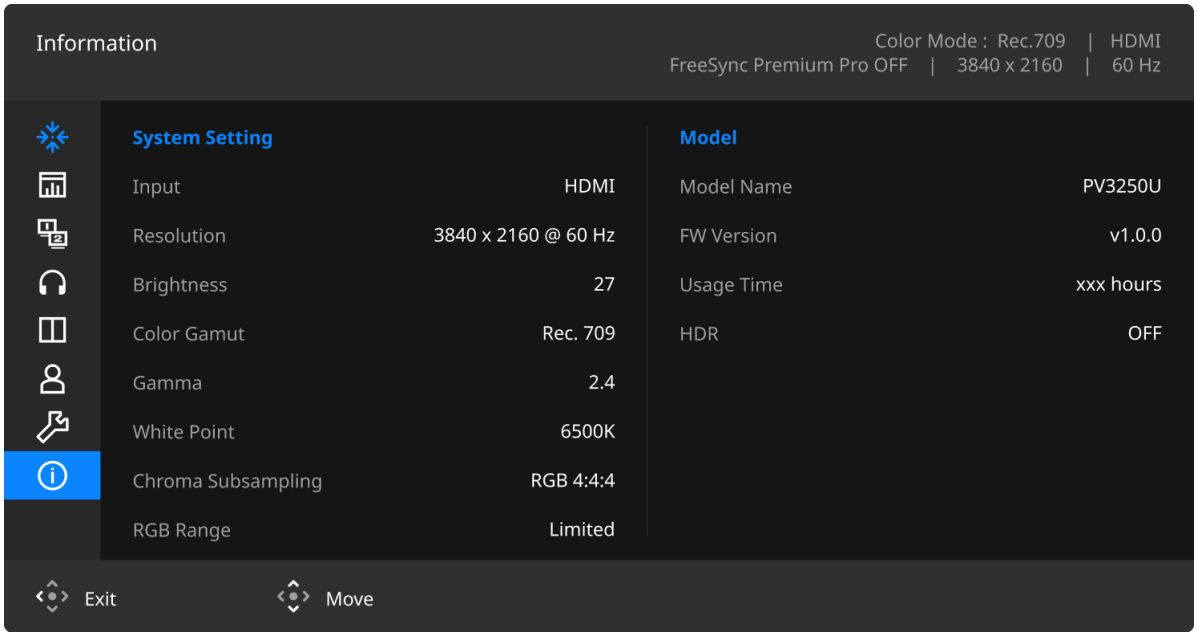

1. Press the 5-way controller to access the main menu.
2. Use or to select **Information**. See Viewing the current display settings on page 41 for more information.

Troubleshooting

Frequently asked questions (FAQ)

Imaging

The image is blurred.

Download **Resolution file** from the website (see Product support on page 3). Refer to "**Adjusting the Screen Resolution**". And then select the correct resolution, refresh rate and make adjustments based on these instructions.

Does the blurring only occur at resolutions lower than the native (maximum) resolution?

Download **Resolution file** from the website (see Product support on page 3). Refer to "**Adjusting the Screen Resolution**". Select the native resolution.

Pixel errors can be seen.

One of several pixels is permanently black, one or more pixels are permanently white, one or more pixels are permanently red, green, blue or another color.

- Clean the LCD screen.
- Cycle power on-off.
- These are pixels that are permanently on or off and is a natural defect that occurs in LCD technology.

The image has a faulty coloration.

It has a yellow, blue or pink appearance.

Go to **Color** > **Reset Color**, and then choose **YES** to reset the color settings to the factory defaults.

If the image is still not correct and the OSD also has faulty coloration, this means one of the three primary colors is missing in the signal input. Now check the signal cable connectors. If any pin is bent or broken off, please contact your dealer to get necessary support.

The image is distorted, flashes or flickers.

Download **Resolution file** from the website (see Product support on page 3). Refer to "**Adjusting the Screen Resolution**". And then select the correct resolution, refresh rate and make adjustments based on these instructions.

You are running the monitor at its native resolution, but the image is still distorted.

Images from different input sources may appear distorted or stretched on the monitor running at its native resolution. To have the optimal display performance of each type of input sources, you can use the **Display Mode** function to set a proper aspect ratio for the input sources. See Display Mode on page 53 for details.

The image is displaced in one direction.

Download **Resolution file** from the website (see Product support on page 3). Refer to "**Adjusting the Screen Resolution**". And then select the correct resolution, refresh rate and make adjustments based on these instructions.

Faint shadow from the static image displayed is visible on the screen.

- Activate the power management function to let your computer and monitor go into a low power "sleep" mode when not actively in use.
- Use a screensaver to prevent the occurrence of image retention.

Power LED indicator

The LED indicator is white or orange.

- If the LED lights up in solid white, the monitor is powered on.
- If the LED is illuminated in white and there is a message **Out of Range** on the screen, this means you are using a display mode that this monitor does not support, please change the setting to one of the supported mode. Download **Resolution file** from the website (see Product support on page 3). Refer to "**Adjusting the Screen Resolution**". And then select the correct resolution, refresh rate and make adjustments based on these instructions.
- If the LED is illuminated in orange, the power management mode is active. Press any button on the computer keyboard or move the mouse. If that does not help, check the signal cable connectors. If any pin is bent or broken off, please contact your dealer to get necessary support.
- If the LED is off, check the power supply mains socket, the external power supply and the mains switch.

OSD controls

The OSD controls are inaccessible.

To unlock the OSD controls when it is preset to be locked, press and hold any key for 10 seconds.

OSD messages

A message **Out of Range** on the screen during computer boot up process.

If there is a message **Out of Range** on the screen during computer boot up process, this means computer compatibility caused by operating system or graphic card. The system will adjust the refresh rate automatically. Just wait until the operating system is launched.

Audio

No sound can be heard from the connected external speakers.

- Remove your headphone (if the headphone is connected to the monitor).
- Check whether the headphone jack is properly connected.
- If the external speakers are USB-powered, check whether the USB connection is OK.
- Increase the volume (volume may be muted or too low) on the external speakers.

KVM Switch

No response after switching to a KVM source.

Check the cable connections and menu settings in the following order.

- Make sure the cables are properly connected and the **KVM Switch** function is enabled. See Establishing KVM connections on page 46 for more information.
- The monitor remembers the KVM pairing setting before it was turned off and may not recognize the new cable connections immediately if changed. You can check if the correct input source has been selected for the KVM source from **KVM Switch**, depending on the KVM source you are switching to.
- If you don't have a hot key for **KVM Switch** and the computer of the KVM source you are switching to is in Sleep mode, switch the input to the sleeping computer, and re-connect your keyboard or mouse manually to the sleeping computer to wake it up. (Windows only) If it does not work, try to press the power button to wake the computer up.

USB-C™ connection (models with USB-C™ ports)

No video or audio output from the laptop with USB-C™ connection.

Check the cable connections and menu settings in the following order.

- Check if the USB-C™ cable has been connected to the monitor and the laptop properly. See Connect the PC video cable. on page 24 for more information.
- Check if the input source has been selected to **USB-C** on **Display** > **Signal Input**.

Remote control/hotkey puck

The monitor does not respond to the remote control/hotkey puck.

- Check if the remote control/hotkey puck and the monitor are within the effective range and there are no obstacles between them. See Hotkey Puck G4 and its effective range on page 37.
- The remote control/hotkey puck's batteries are running low. Replace the batteries with new ones. See Installing the batteries to Hotkey Puck G4 on page 28.
- Check if the OSD controls are locked. To unlock the OSD controls, press and hold any key on the monitor for 10 seconds.

Need more help?

If your problems remain after checking this manual, please contact your place of purchase or visit the local website from Support.BenQ.com for more support and local customer service.